Polo Estate 1998 ➤

5-speed manual gearbox 02J									
Gearbox ID	DSF	DTA	EKU	EKV	EKW	EWY	EWZ	EXA	

Edition 01.2000

Protected by copyright. Copying for private or commercial purposes, in part or in whole, is not permitted unless authorised by Volkswagen AG. Volkswagen AG does not guarantee or accept any liability with respect to the correctness of information in this document. Copyright by Volkswagen AG.

satelettronica

List of Workshop Manual Repair GroupsList of Workshop Manual Repair GroupsList of Workshop Manual Repair Groups

Polo Estate 1998 ➤

5-speed manual gearbox 02J

Repair Group

00 - Technical data
30 - Clutch
34 - Controls, Housing
35 - Gears, Shafts
39 - Final drive, Differential rear

satelettronica

Protected by copyright. Copying for private or commercial purposes, in part or in whole, is not permitted unless authorised by Volkswagen AG. Volkswagen AG does not guarantee or accept any liability with respect to the correctness of information in this document. Copyright by Volkswagen AG.

Technical information should always be available to the foremen and mechanics, because their careful and constant adherence to the instructions is essential to ensure vehicle road-worthiness and safety. In addition, the normal basic safety precautions for working on motor vehicles must, as a matter of course, be observed.

All rights reserved.
No reproduction without prior agreement from publisher.

Copyright © 2011 Volkswagen AG, Wolfsburg

Contents

00 - Technical data 1
1 Gearbox identification 1
1.1 Gearbox identification 1
1.2 Code letters, gearbox allocation, ratios, capacities 2
2 Transmission layout 5
2.1 Transmission layout 5
3 Calculating overall ratio "i" 7
3.1 Calculating overall ratio "i" 7
4 General repair instructions 7
4.1 General repair instructions 7

30 - Clutch 10
1 Servicing clutch control 10
1.1 Servicing clutch control 10
1.2 Assembly overview - Pedal cluster 11
1.3 Removing and installing over-centre spring 14
1.4 Removing and installing clutch pedal 15
1.5 Removing and installing mounting bracket 17
1.6 Assembly overview - Hydraulic system 21
1.7 Removing and installing master cylinder 25
1.8 Bleeding clutch system 27
2 Servicing clutch release mechanism 28
2.1 Servicing clutch release mechanism 28
3 Servicing clutch 31
3.1 Servicing clutch 31

34 - Controls, Housing 36
1 Servicing gear selector mechanism up to 09.99 36
1.1 Servicing gear selector mechanism up to 09.99 36
1.2 Installation position of gear selector mechanism 36
1.3 Removing and installing gear selector cables 38
1.4 Removing and installing gear stick housing 44
1.5 Installing gear stick gaiter to gear stick knob 47
1.6 Removing and installing gear stick 48
1.7 Adjusting gear selector mechanism up to 09.99 52
2 Servicing gear selector mechanism from 10.99 56
2.1 Servicing gear selector mechanism from 10.99 56
2.2 Installation position of gear selector mechanism 56
2.3 Removing and installing selector lever knob and gaiter 59
2.4 Servicing gear stick and gear stick housing 61
2.5 Assembly overview - Removing and installing selector cables 65
2.6 Removing and installing selector mechanism 68
2.7 Adjusting gear selector mechanism from 10.99 70
3 Removing and installing gearbox 74
3.1 Removing and installing gearbox 74
4 Checking gear oil 88
4.1 Checking gear oil 88
5 Dismantling and assembling gearbox 89
5.1 Dismantling and assembling gearbox 89
5.2 Overview 89
5.3 Assembly overview 91
5.4 Removing and installing cover for gearbox housing and 5th gear 92

Copyright by Volkswagen AG. Volkswagen AG does not guarantee or accept any liability with respect to the correctness of information in this document. Copying for private or commercial purposes, in part or in whole, is not permitted unless authorised by Volkswagen AG. Volkswagen AG does not guarantee or accept any liability with respect to the correctness of information in this document.
satelettronica

5.5 Removing and installing gearbox housing and selector mechanism 95
5.6 Removing and installing input shaft, output shaft (pinion shaft), differential and selector forks 97
5.7 Assembly sequence 100

6 Servicing gearbox housing and clutch housing 118
6.1 Servicing gearbox housing and clutch housing 118

7 Dismantling and assembling gearbox selector mechanism up to 09.99 128
7.1 Dismantling and assembling gearbox selector mechanism up to 09.99 128

8 Dismantling and assembling gearbox selector mechanism from 10.99 133
8.1 Dismantling and assembling gearbox selector mechanism from 10.99 133

9 Dismantling and assembling selector forks 139
9.1 Dismantling and assembling selector forks 139

35 - Gears, Shafts 146

1 Dismantling and assembling input shaft 146
1.1 Dismantling and assembling input shaft 146

2 Adjusting input shaft 160
2.1 Adjusting input shaft 160
2.2 Table of adjustment shims 162
2.3 Performing measurement check 164

3 Dismantling and assembling output shaft 165
3.1 Dismantling and assembling output shaft 165
3.2 From gearbox build date 04 09 0 the synchronisation for 1st gear has been modified 191

4 Adjusting output shaft 195
4.1 Adjusting output shaft 195

5 Dismantling and assembling reverse shaft 198
5.1 Dismantling and assembling reverse shaft 198

39 - Final drive, Differential rear 203

1 Renewing flanged shaft oil seals (gearbox installed) 203
1.1 Renewing flanged shaft oil seals (gearbox installed) 203

2 Dismantling and assembling differential 206
2.1 Dismantling and assembling differential 206

3 Adjustment overview 220
3.1 Adjustment overview 220

4 Adjusting differential 221
4.1 Adjusting differential 221

Protected by copyright. Copying for private or commercial purposes, in part or in whole, is not permitted unless authorised by Volkswagen AG. Volkswagen AG does not guarantee or accept any liability with respect to the correctness of information in this document. Copyright by Volkswagen AG.
satelettronica

00 - Technical data

1 - Gearbox identification

1.1 - Gearbox identification

Protected by copyright. Copying for private or commercial purposes, in part or in whole, is not permitted unless authorised by Volkswagen AG. Volkswagen AG does not guarantee or accept any liability with respect to the correctness of information in this document. Copyright by Volkswagen AG.

satelettronica

In the Caddy 1996 ▸, Polo Classic 1996 ▸and Polo Estate 1998 ▸ the 5-speed manual gearbox 02J is installed in combination with the 4-cyl. engine.

Allocation =>Page 2 .

-> Location on gearbox

Code letters and date of manufacture (arrow 1) manual gearbox 02J (arrow 2)

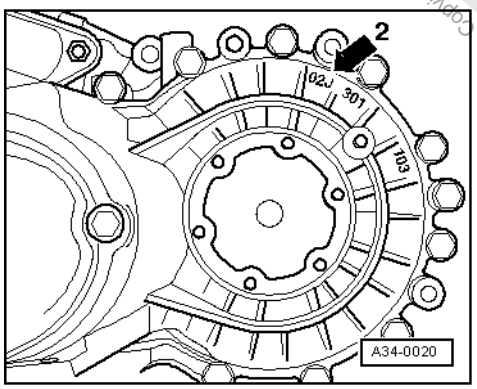

-> Manual gearbox 02J (arrow 2)

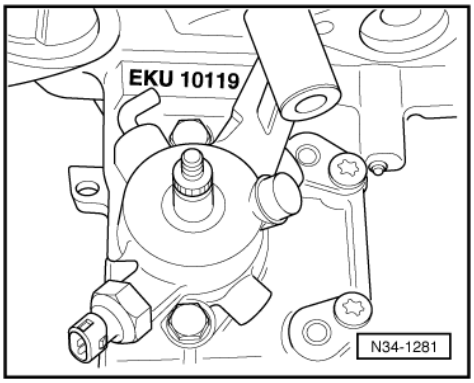

-> Code letters and date of manufacture of gearbox

Example:	EKU	10	11	9
	I	I	I	I
	I	I	I	I
	Code letters	Day	Month	Year (1999) of manufacture

Additional data depends on manufacture.

Note:

The gearbox code letters are also shown on the vehicle identification plates.

1.2 - Code letters, gearbox allocation, ratios, capacities

Manual gearbox		5 speed 02J		
Code letters		DSF	DTA	EKU
Manufactured	from to	01.99 09.99	01.99 09.99	10.99 09.00
Allocation	Model	Caddy 1996 ▸	Polo Classic 1996 ▸ Polo Estate 1998 ▸	Polo Classic 1996 ▸ Polo Estate 1998 ▸
	Engine	1.9 ltr. - 66 kW Turbo Diesel	1.9 ltr. - 66 kW Turbo Diesel	1.9 ltr. - 66 kW Turbo Diesel
Ratio: Z2 : Z1	Final drive	60 : 19 = 3.158	60 : 19 = 3.158	60 : 19 = 3.158
	1st gear	34 : 9 = 3.778	33 : 10 = 3.300	33 : 10 = 3.300
	2nd gear	36 : 17 = 2.118	35 : 18 = 1.944	35 : 18 = 1.944
	3rd gear	34 : 25 = 1.360	34 : 26 = 1.308	34 : 26 = 1.308
	4th gear	34 : 35 = 0.971	33 : 36 = 0.917	33 : 36 = 0.917
	5th gear	34 : 45 = 0.756	33 : 46 = 0.717	33 : 46 = 0.717
	6th gear	-	-	-
	Reverse gear	18 : 9 x 36 : 20 = 3.600	18 : 9 x 36 : 20 = 3.600	17 : 10 x 36 : 20 = 3.060
	Speedometer drive	13 : 22 = 0.591	13 : 22 = 0.591	13 : 22 = 0.591

From 10.99 new selector mechanism. The selector cover of the gearbox has been modified

Code letters	DSF	DTA	EKU

satelettronica

Capacity	2.0 litres	2.0 litres	2.0 litres
Specification	Gear oil G50 SAE 75W90 (synthetic oil)		
Clutch control	hydraulic	hydraulic	hydraulic
Clutch plate ø	228 mm	228 mm	228 mm
Drive shaft flange ø	100 mm	100 mm	100 mm
Overall ratio in top gear	2.378	2.264	2.264

Manual gearbox		5 speed 02J		
Code letters		EKV	EKW	EWY
Manufactured	from to	10.99 09.00	10.99 09.00	09.00
Allocation	Model	Caddy 1996 ▸	Polo Classic 1996 ▸ Polo Estate 1998 ▸	Caddy 1996 ▸
	Engine	1.9 ltr. - 66 kW Turbo Diesel	1.9 ltr. - 66 kW Turbo Diesel	1.9 ltr. - 66 kW Turbo Diesel
Ratio: Z2 : Z1	Final drive	60 : 19 = 3.158	60 : 19 = 3.158	60 : 19 = 3.158
	1st gear	34 : 9 = 3.778	34 : 9 = 3.778	34 : 9 = 3.778
	2nd gear	36 : 17 = 2.118	33 : 16 = 2.063	36 : 17 = 2.118
	3rd gear	34 : 25 = 1.360	31 : 23 = 1.348	34 : 25 = 1.360
	4th gear	34 : 35 = 0.971	29 : 30 = 0.967	34 : 35 = 0.971
	5th gear	34 : 45 = 0.756	29 : 39 = 0.744	34 : 45 = 0.756
	6th gear	-	-	-
	Reverse gear	18 : 9 x 36 : 20 = 3.600	18 : 9 x 36 : 20 = 3.600	18 : 9 x 36 : 20 = 3.600
	Speedometer drive	13 : 22 = 0.591	13 : 22 = 0.591	13 : 22 = 0.591

From 10.99 new selector mechanism. The selector cover of the gearbox has been modified

From 09.00 modified synchronisation for the 1st gear and modified selector mechanism gearbox side

Code letters	EKV	EKW	EWY
Capacity	2.0 litres	2.0 litres	2.0 litres
Specification	Gear oil G50 SAE 75W90 (synthetic oil)		
Clutch control	hydraulic	hydraulic	hydraulic
Clutch plate ø	228 mm	228 mm	228 mm
Drive shaft flange ø	100 mm	100 mm	100 mm
Overall ratio in top gear	2.378	2.349	2.378

Manual gearbox		5 speed 02J	
Code letters		EWZ	EXA
Manufactured	from to	09.00	09.00
Allocation	Model	Polo Classic 1996 ▸ Polo Estate 1998 ▸	Polo Classic 1996 ▸ Polo Estate 1998 ▸
	Engine	1.9 ltr. - 81 kW Turbodiesel	1.9 ltr. - 66 kW Turbodiesel
Ratio: Z2 : Z1	Final drive	60 : 19 = 3.158	60 : 19 = 3.158
	1st gear	34 : 9 = 3.778	33 : 10 = 3.300
	2nd gear	33 : 16 = 2.063	35 : 18 = 1.944
	3rd gear	31 : 23 = 1.348	34 : 26 = 1.308

satelettronica

Manual gearbox		5 speed 02J		
	4th gear	29 : 30 = 0.967	33 : 36 = 0.917	
	5th gear	29 : 39 = 0.744	33 : 46 = 0.717	
	6th gear	-	-	-
	Reverse gear	18 : 9 x 36 : 20 = 3.600	17 : 10 x 36 : 20 = 3.060	
	Speedometer drive	13 : 22 = 0.591	13 : 22 = 0.591	

From 09.00 modified synchronisation for the 1st gear and modified selector mechanism gearbox side

Code letters	EWZ	EXA	
Capacity	2.0 litres	2.0 litres	
Specification	Gear oil G50 SAE 75W90 (synthetic oil)		
Clutch control	hydraulic	hydraulic	
Clutch plate ø	228 mm	228 mm	
Drive shaft flange ø	100 mm	100 mm	
Overall ratio in top gear	2.349	2.264	

Protected by copyright. Copying for private or commercial purposes, in part or in whole, is not permitted unless authorised by Volkswagen AG. Volkswagen AG does not guarantee or accept any liability with respect to the correctness of information in this document. Copyright by Volkswagen AG.

satelettronica

2 - Transmission layout

2.1 - Transmission layout

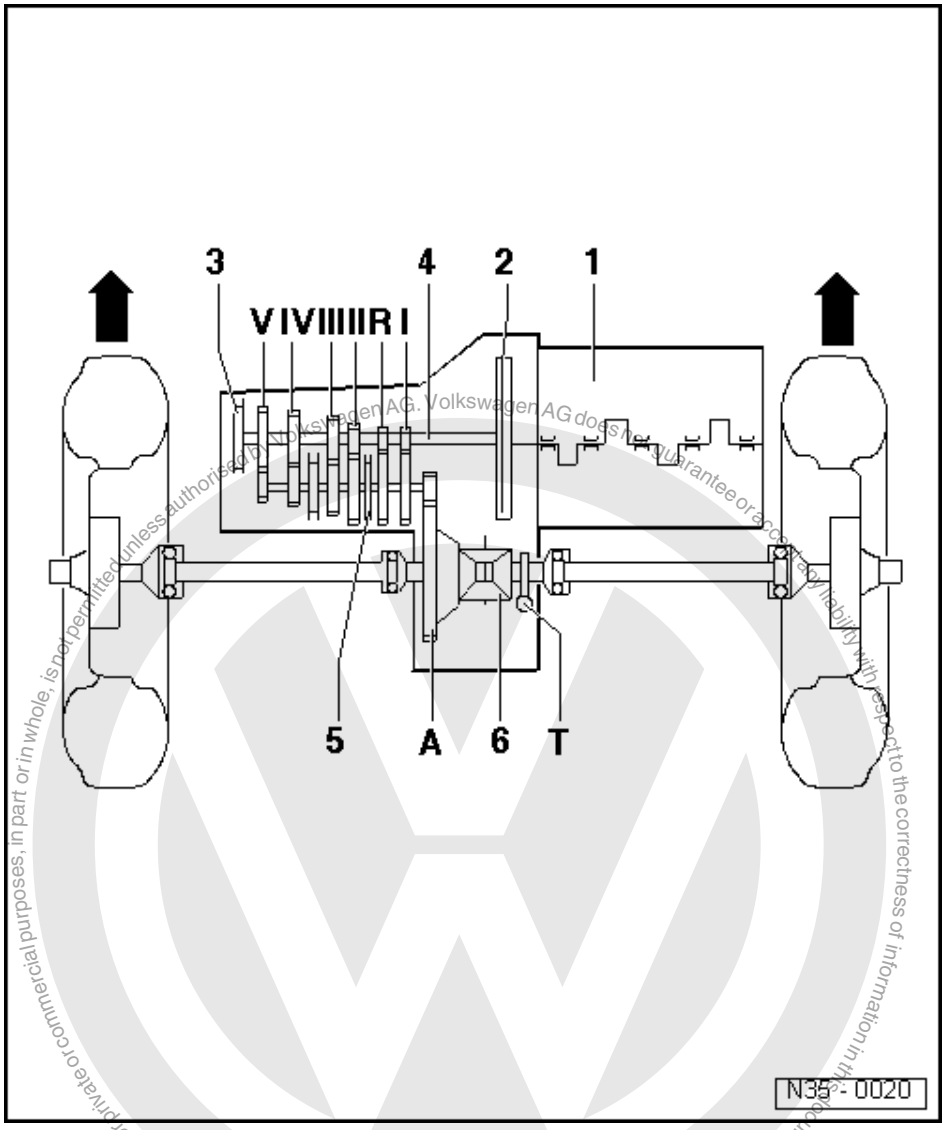

Protected by copyright. Copying for private or commercial purposes, in part or in whole, is not permitted unless authorised by Volkswagen AG. Volkswagen AG does not guarantee or accept any liability with respect to the correctness of information in this document. Copyright by Volkswagen AG.

satelettronica

Designation

1 Engine
2 Clutch
3 Gearbox
4 Input shaft
5 Output shaft/pinion shaft
6 Differential

Arrows point in direction of travel

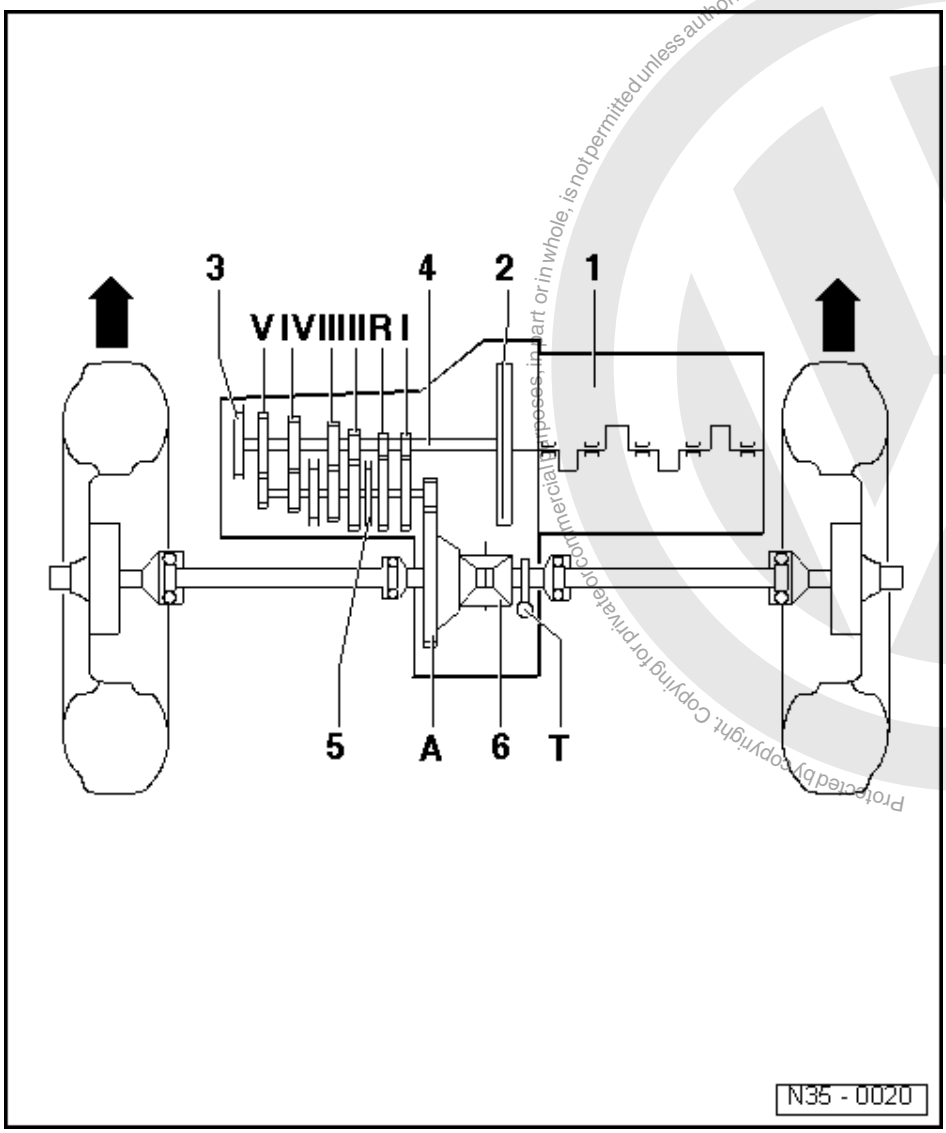

Gear ratios

I	- 1st gear
II	- 2nd gear
III	- 3rd gear
IV	- 4th gear
V	- 5th gear
R	- Reverse gear
A	- Final drive
T	- Speedometer drive

Arrows point in direction of travel

Protected by copyright. Copying for private or commercial purposes, in part or in whole, is not permitted unless authorised by Volkswagen AG. Volkswagen AG does not guarantee or accept any liability with respect to the correctness of information in this document. Copyright by Volkswagen AG.
satelettronica

3 - Calculating overall ratio "i"

3.1 - Calculating overall ratio "i"

Example:

	5th gear	Final drive
Drive gear	ZG1 = 34	ZA1 = 19
Driven gear	ZG2 = 45	ZA2 = 60

i= Z2/ Z1 1)

iG = Gear ratio = ZG2/ZG1 = 34 / 45 = 0.756

iA = Axle ratio = ZA2 / ZA1 = 60 / 19 = 3.158

iges. = Overall ratio
= iG x iA = 0.756 x 3.158 = 2.387

1) Z1 = No. of teeth driving gear, Z2 = No. of teeth driven gear

4 - General repair instructions

4.1 - General repair instructions

To ensure perfect and successful gearbox repairs, the greatest care and cleanliness as well as the use of good and proper tools is essential. Obviously, the basis rules for safety are also applicable during repair work.

A number of generally valid instructions applicable for the various repair procedures - which were previously repeated a number of times at numerous places in the Workshop Manual - are summarized here. They apply to this Workshop Manual.

Gearbox

- When installing ensure that the dowel sleeves between the engine and gearbox are correctly located.
- When changing a gearbox fill with gear oil to the lower edge of the filler hole.
- Capacities and specifications => Page 2 .

Notes:

- If the oil level is topped up with the gearbox installed, carry out oil level check as follows:
- Fill with oil to the lower edge of the filler hole and refit filler plug. Start engine, engage a gear and allow gearbox to turn for approx. 2 minutes. Switch off engine and again top-up oil to lower edge of filler hole.

Gaskets, sealing rings

- Thoroughly clean joint surfaces and apply sealant AMV 188 200 03.
- Apply sealant uniformly but not too thick.

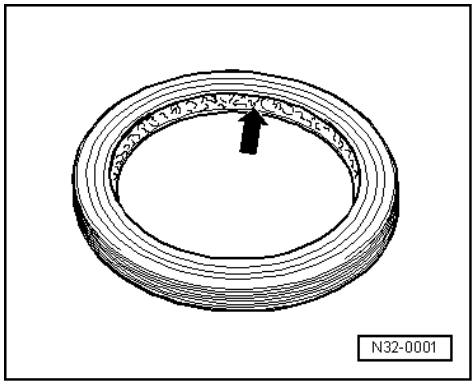

Protected by copyright. Copying for private or commercial purposes, in part or in whole, is not permitted unless authorised by Volkswagen AG. Volkswagen AG does not guarantee or accept any liability with respect to the correctness of information in this document. Copyright by Volkswagen AG.
satelettronica

- Renew "O-rings".
- Radial shaft oil seals.

Before installing:

-> Lightly oil outer circumference, fill space between sealing lips (arrow) with grease G 052 128 A1.

After installation:

Check gearbox oil; if necessary top-up to lower edge of oil filler hole, specification => Page 2 .

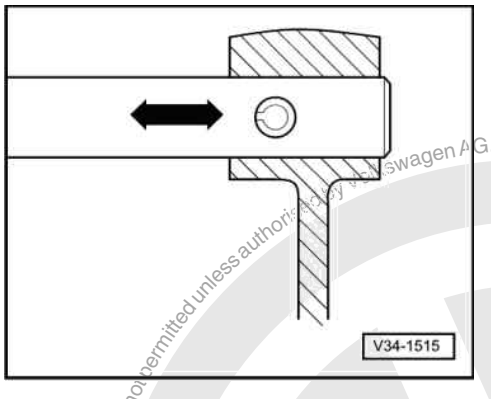

Locking devices

- Renew circlips.
- Do not overstretch circlips.
- Circlips must locate properly in the groove.
- -> Renew spring pins
  Installation position: Slot longitudinal to line of force.

Bolts and nuts

- Tighten and loosen bolts and nuts for securing covers and housings in a diagonal sequence.
- Especially delicate parts, such as clutch pressure plates, must not be distorted. Loosen and tighten bolts and nuts in stages in a diagonal sequence.
- Tightening torques as specified are for unoiled bolts and nuts.
- Renew self-locking bolts and nuts.

Bearings

- Install needle bearings with lettered side (thicker metal) towards fitting tool.
- Lubricate all gearbox bearings with gear oil.
- Taper roller bearings fitted to one shaft must be renewed as a set. Use same make of bearings if possible!
- Heat inner races to approx. 100 °C before installing.
- Do not interchange outer or inner races of bearings of the same size. The bearings are matched in pairs.

Shims

- Measure shims at several points with a micrometer. Tolerance variations make it possible to find the exact shim thickness required.
- Check for burrs and damage.
- Only install perfect shims.

Synchronizer rings

- Do not interchange. When reusing always fit to the same gear.
- Check for wear and renew if necessary.
- Coat with gear oil before installing.

Selector gears

- Before installing clean and heat on a hot plate to approx. 100 °C.

Copyright by Volkswagen AG. Volkswagen AG does not guarantee or accept any liability with respect to the correctness of information in this document. Copying for private or commercial purposes, in part or in whole, is not permitted unless authorised by Volkswagen AG.
satelettronica

- Temperature can be checked with temperature tester V.A.G 1558.

Protected by copyright. Copying for private or commercial purposes, in part or in whole, is not permitted unless authorised by Volkswagen AG. Volkswagen AG does not guarantee or accept any liability with respect to the correctness of information in this document. Copyright by Volkswagen AG.

satelettronica

30 - Clutch

1 - Servicing clutch control

1.1 - Servicing clutch control

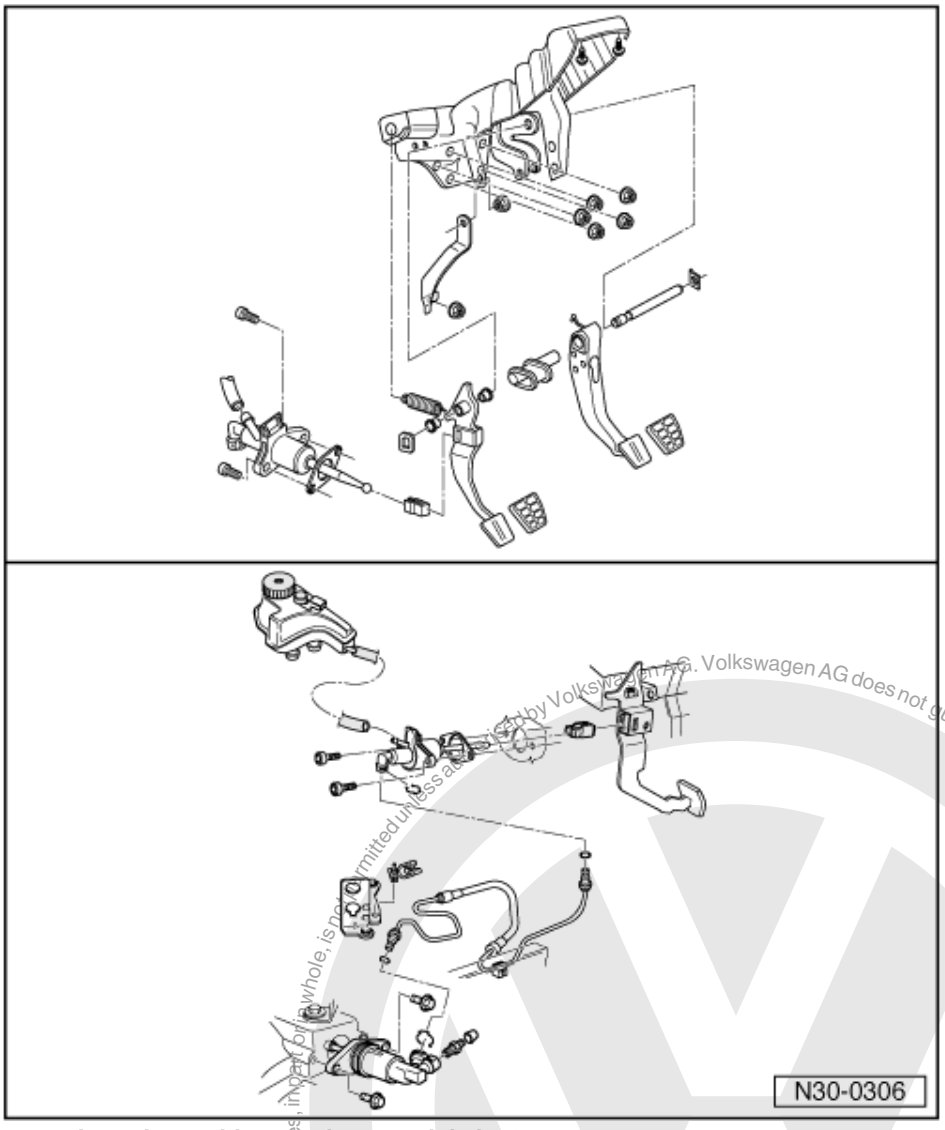

I - Assembly overview - pedal cluster
=>page 11

III - Assembly overview - hydraulics
=>page 21

Notes:

- Disconnect battery earth strap.
- For vehicles with coded radio obtain radio code.
- Lubricate all bearings and contact surfaces with poly resin grease part No. G 052 142 A2.

Protected by copyright. Copyright by Volkswagen AG.
Volkswagen AG does not guarantee or accept any liability with respect to the correctness of information in this document. Copyright by Volkswagen AG.
satelettronica

1.2 - Assembly overview - Pedal cluster

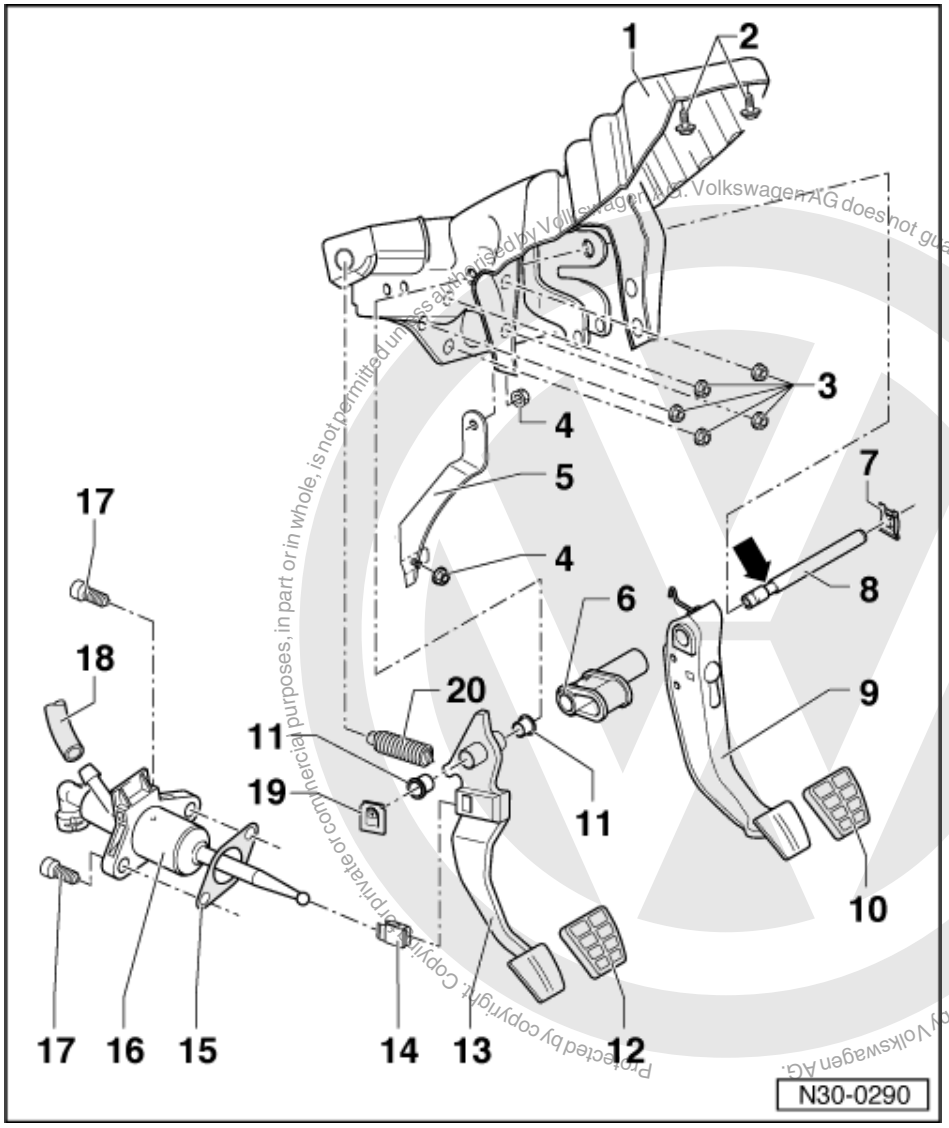

Protected by copyright. Copyright by Volkswagen AG. Volkswagen AG does not guarantee or accept any liability with respect to the correctness of information in this document. Copyright by Volkswagen AG. Reproduced or published unless authorised by Volkswagen AG, is not permitted in whole or in part for commercial purposes, or private use.

satelettronica

1 Mounting bracket
- Removing and installing => page 17

2 Hexagon bolt, 25 Nm

3 Self-locking hexagon nut, 25 Nm
- For mounting bracket to stud/brake servo
- Always renew

4 Self-locking hexagon nut, 25 Nm
- Always renew

5 Support

6 Mounting bush
- For mounting the column tube with steering column

7 Securing clip
- Removing and installing => Page 15

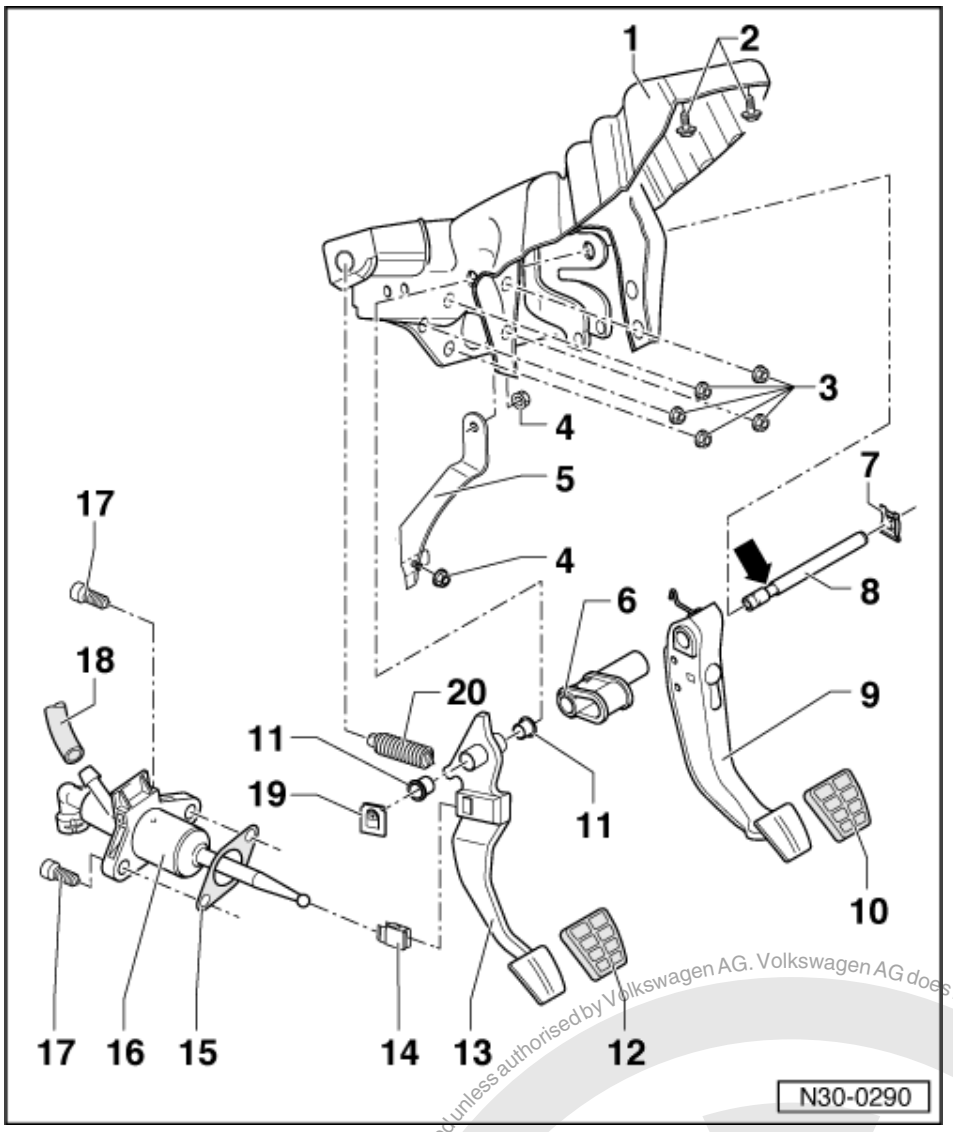

8 Pivot pin for clutch and brake pedal
- Installation position: The groove (arrow) is located on the clutch pedal side.

9 Brake pedal

10 Cap

11 Mounting bush
- Check for wear, renew if necessary
- Knock out with drift
- Press in by clamping in vice, use vice clamps

12 Cap

13 Clutch pedal
- Removing and installing => Page 15

14 Retainer
- Removing and installing => Page 22

Protected by copyright. Copying for private or commercial purposes, in part or in whole, is not permitted unless authorised by Volkswagen AG. Volkswagen AG does not guarantee or accept any liability with respect to the correctness of information in this document. Copyright by Volkswagen AG.
satelettronica

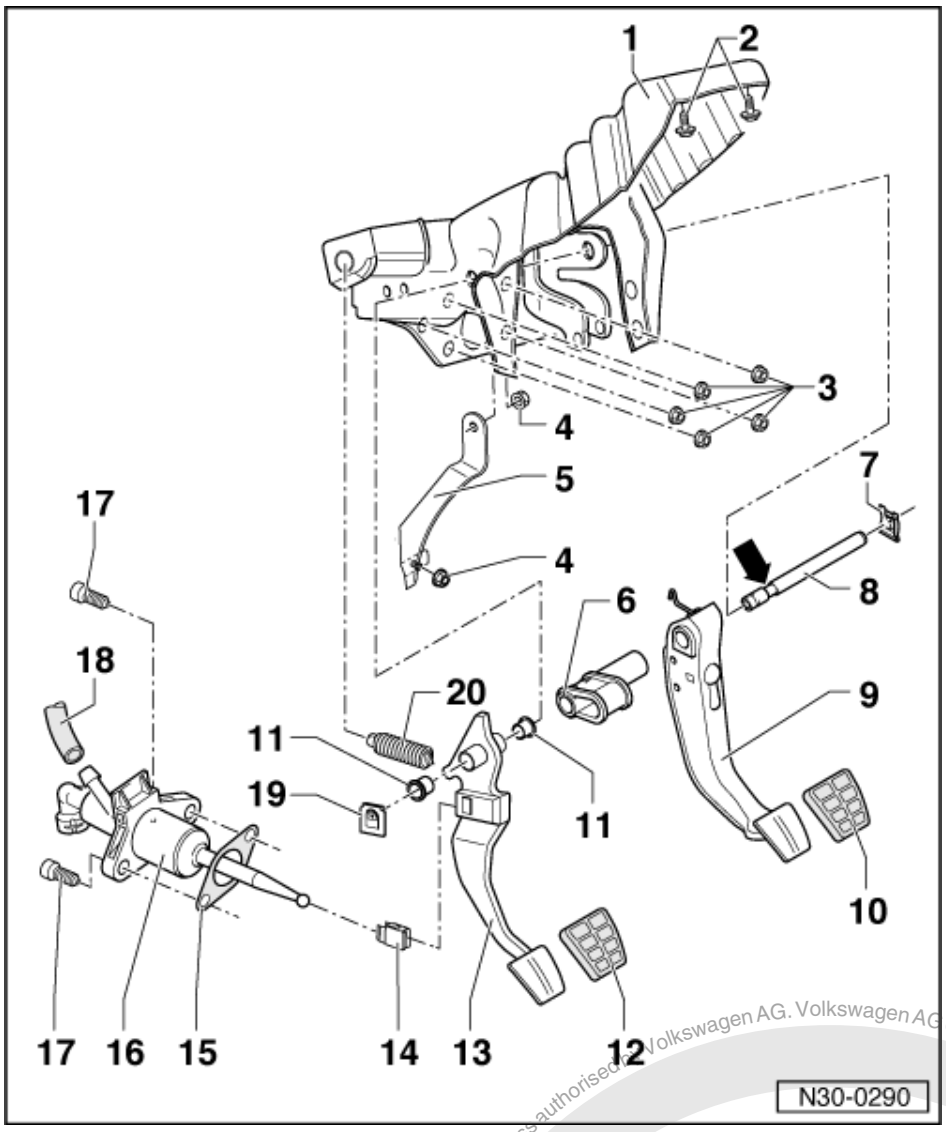

15 Seal
- Always renew

16 Master cylinder
- Removing and installing => page 25

17 Socket head bolt, 20 Nm

18 Supply hose

19 Securing clip
- Removing and installing => Page 15

20 Over-centre spring
- Removing and installing =>page 14

Protected by copyright. Copying for private or commercial purposes, in part or in whole, is not permitted unless authorised by Volkswagen AG. Volkswagen AG does not guarantee or accept any liability with respect to the correctness of information in this document. Copyright by Volkswagen AG.
satelettronica

1.3 - Removing and installing over-centre spring

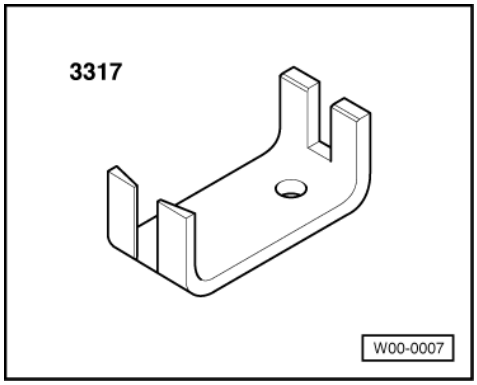

Special tools and workshop equipment required

- 3317 Installation clamp

Removing

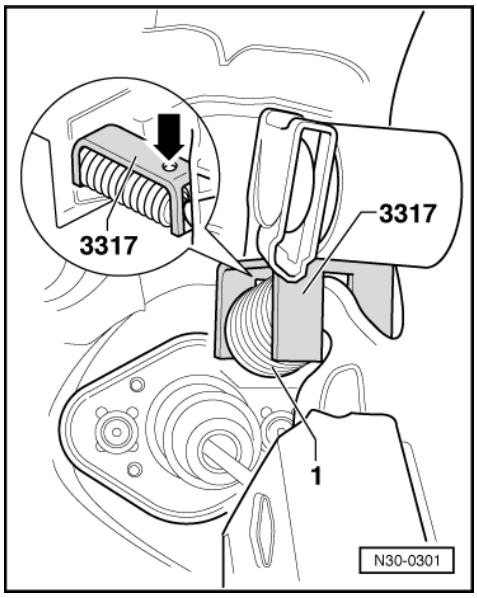

- Take lower trims off lighting switch and steering column and remove driver's stowage compartment.

=> General body repairs, interior; Repair group 68; Stowage compartments, covers, trims Stowage compartments, covers, trims

- Remove driver's footwell cover.

=> General body repairs, interior; Repair group 70; Removing and installing dash panel Removing and installing dash panel

- -> Tension over-centre spring -1- with clutch pedal and fit retaining clamp 3317 from above.

Note:

The drilling (arrow) faces towards clutch pedal.

- Bring clutch pedal to rest position, when doing this take out over-centre spring together with retaining clamp 3317 downwards.

Protected by copyright. Copying for private or commercial purposes, in part or in whole, is not permitted unless authorised by Volkswagen AG. Volkswagen AG does not guarantee or accept any liability with respect to the correctness of information in this document. Copyright by Volkswagen AG.
satelettronica

Installing

- Depress clutch pedal onto stop towards bulkhead.

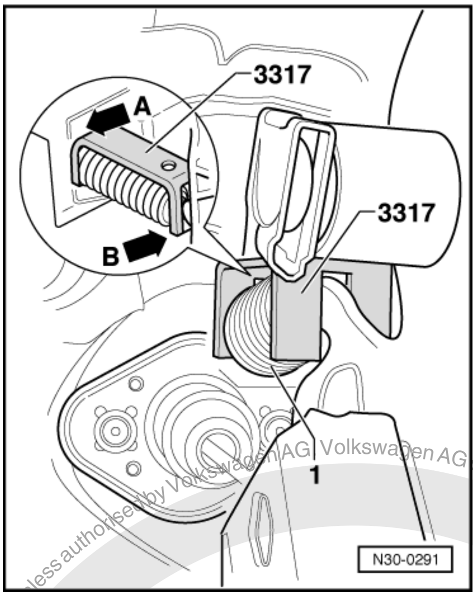

- -> First insert over-centre spring -1- into rear mounting (arrow A).
- Now press front part of over-centre spring upwards until the retaining clamp seats on the mounting lug of the clutch pedal (arrow B).
- Take out retaining clamp whilst bringing clutch pedal to rest position.

1.4 - Removing and installing clutch pedal

Removing

- First check whether a coded radio is fitted. If this is the case obtain the anti-theft coding.
- With the ignition switched off disconnect the battery earth strap.
- Take lower trims off lighting switch and steering column and remove driver's stowage compartment.

=> General body repairs, interior; Repair group 68; Stowage compartments, covers, trims Stowage compartments, covers, trims

- Remove driver's footwell cover.

=> General body repairs, interior; Repair group 70; Removing and installing dash panel Removing and installing dash panel

- Remove clutch pedal switch.
- Removing over-centre spring => page 14 .
- Separate clutch pedal from master cylinder => Page 25 .

Protected by copyright. Copying for private or commercial purposes, in part or in whole, is not permitted unless authorised by Volkswagen AG. Volkswagen AG does not guarantee or accept any liability with respect to the correctness of information in this document. Copyright by Volkswagen AG.

satelettronica

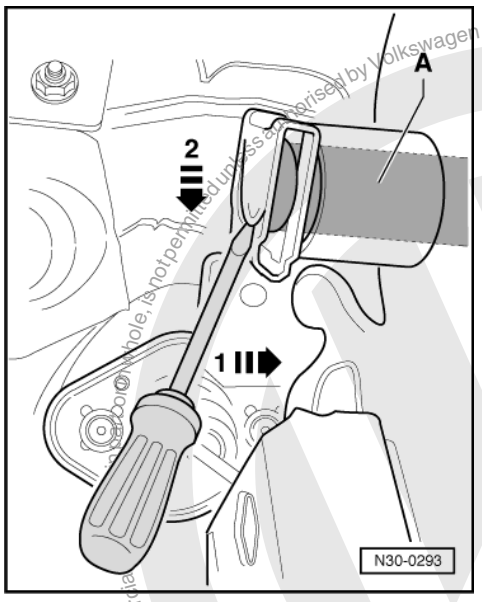

- -> Remove clutch pedal securing clip from pivot pin by levering tab in direction of arrow -1-.
- Then push securing clip -2- off pivot pin -1- in direction of arrow.

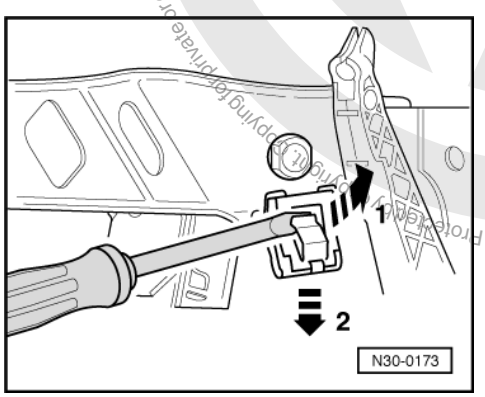

- -> Remove brake pedal securing clip from pivot pin by levering tab up with a screwdriver -arrow 1- and pushing clip off -arrow 2-.
- Pull clutch and brake pedal pivot pin out to the right, until the clutch pedal can be removed.

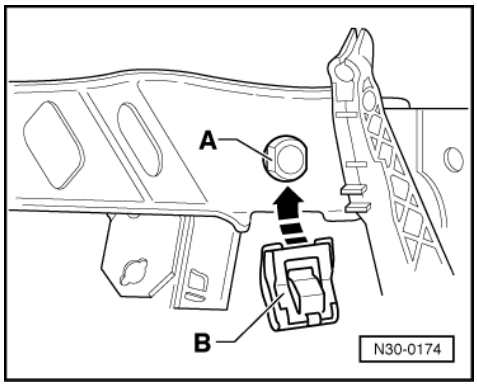

Installing

Installation is carried out in the reverse sequence, when doing this note the following:

- -> Align clutch pedal/brake pedal pivot pin so that the flats -A- are vertical.
- Fit clutch pedal onto pivot pin.
- Then install securing clip for clutch pedal.
- Fit securing clip -B- onto brake pedal end of pivot pin -arrow-.

Protected by copyright. Copying for private or commercial purposes, in whole or in part, is not permitted unless authorised by Volkswagen AG. Volkswagen AG does not guarantee or accept any liability with respect to the correctness of information in this document. Copyright by Volkswagen AG.
satelettronica

- Engage clutch pedal with operating rod/master cylinder as follows:

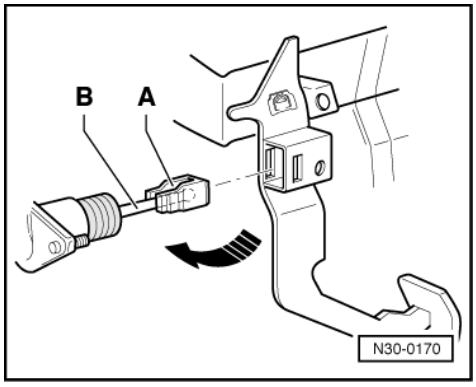

- -> The retainer -A- must be fitted to the master cylinder operating rod -B-.
- To engage press clutch pedal towards bulkhead (direction of arrow). Ensure correctly located.
- Install and adjust new clutch pedal switch.

=> Running gear, ABS self-diagnosis; Repair group 01; Electrical check of ABS, ABS/EDL ITT Mark 20 GI and ITT Mark 20 IE. Electrical check of ABS, ABS/EDL ITT Mark 20 GI and ITT Mark 20 IE.

1.5 - Removing and installing mounting bracket

Removing

- First check whether a coded radio is fitted. If this is the case obtain the anti-theft coding.
- With the ignition switched off disconnect the battery earth strap.
- Take lower trims off lighting switch and steering column and remove driver's stowage compartment.

=> General body repairs, interior; Repair group 68; Stowage compartments, covers, trims Stowage compartments, covers, trims

- Remove driver's footwell cover.

=> General body repairs, interior; Repair group 70; Removing and installing dash panel Removing and installing dash panel

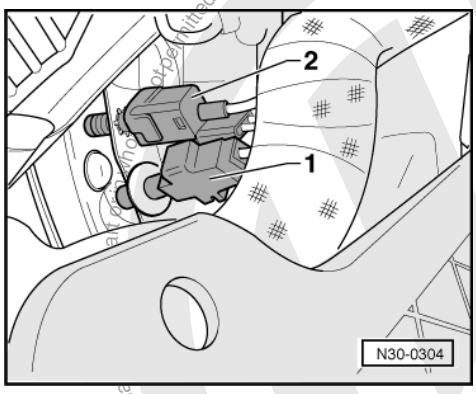

- Remove column tube with steering column.

=> Running gear, Axles, Steering; Repair group 48; Assembly overview: Steering column, column tube, steering wheel and steering wheel with airbag; Removing and installing column tube with steering column Assembly overview: Steering column, column tube, steering wheel and steering wheel with airbag Removing and installing column tube with steering column

- Remove clutch pedal => Page 15 .

Protected by copyright. Copyright by Volkswagen AG.
Copying for private or commercial purposes, in part or in whole, is not permitted unless authorised by Volkswagen AG. Volkswagen AG does not guarantee or accept any liability with respect to the correctness of information in this document. Copyright by Volkswagen AG.
satelettronica

- -> Remove brake light switch -1- and brake pedal switch -2-.

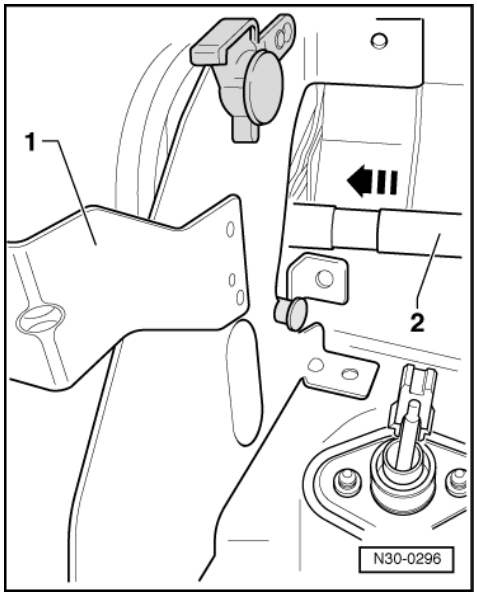

- Separate brake pedal from brake servo.

=> Brake systems; Repair group 46; Brake pedal - assembly overview; Separating brake pedal from brake servo Brake pedal - assembly overview Separating brake pedal from brake servo

- -> Unscrew relay carrier -1- from bulkhead and pull into footwell as far as possible.
- Push clutch and brake pedal mounting pin -2- in direction of arrow behind relay carrier until brake pedal hangs loose.
- Remove brake pedal.

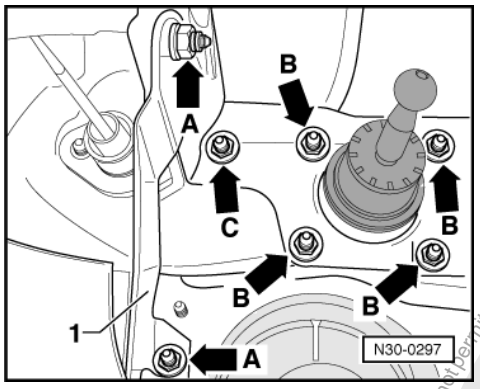

- -> Unscrew strut -1- from mounting bracket and from bulkhead -arrows A-.
- Unscrew nuts -arrows B- from brake servo and nut -arrow C- from bulkhead.

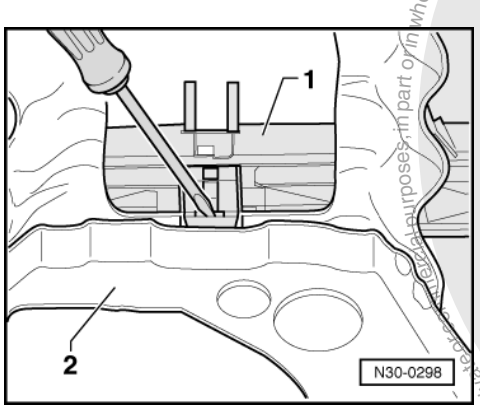

satelettronica
Protected by copyright. Copying for private and commercial purposes, in part or in whole, is not permitted unless authorised by Volkswagen AG. Volkswagen AG does not guarantee or accept any liability with respect to the correctness of information in this document. Copyright by Volkswagen AG.

- -> Using a screwdriver, lever up cable channel -1- from mounting bracket -2-.

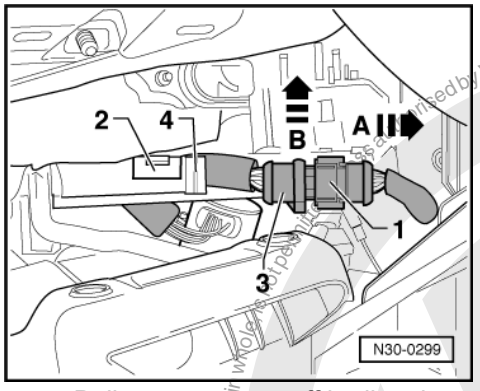

- -> Pull connector -1- off in direction of arrow -A-.
- Unclip tab -2-.
- Pull out connector -3- for accelerator pedal position sender in direction of arrow -B- from cable channel -4- and place to rear.
- Pull brake servo into engine compartment as far as possible.
- Turn mounting bracket 90° to the right and then pull to the left.
- Guide brake servo push rod out of mounting bracket.

- Turn mounting bracket to first position again.
- Remove mounting bracket from passenger compartment.

The accelerator pedal faces to driver's seat.

Installing

- Insert mounting bracket below instrument panel.

The accelerator pedal faces to driver's seat.

- Turn mounting bracket 90° to right and then pull to left.
- Guide brake servo push rod into mounting bracket.

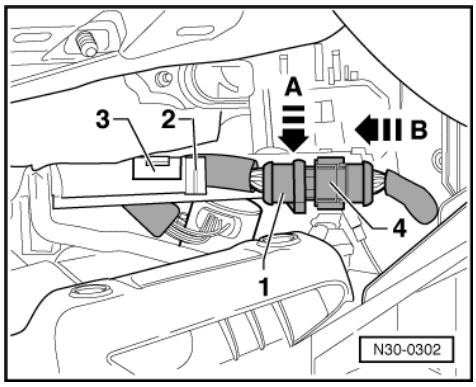

- Turn mounting bracket to first position again.
- -> Guide connector -1- for accelerator pedal position sender from rear above cable channel -2- and insert in direction of arrow -A-.
- Clip in tab -3-.
- Fit connector -4- in direction of arrow -B-.
- Clip on cable channel to top of mounting bracket.

- Press brake servo to bulkhead in installation position.

Protected by copyright. Copyright by Volkswagen AG. Volkswagen AG does not guarantee or accept any liability with respect to the correctness of information in this document. Copyright by Volkswagen AG.
satelettronica

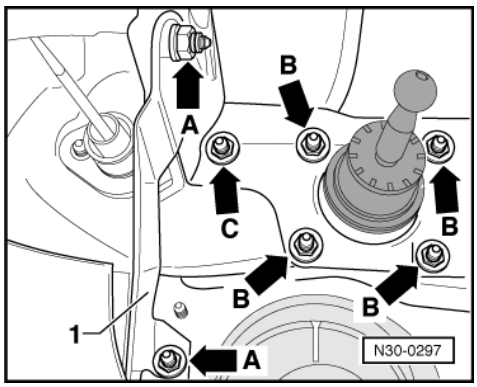

- -> Tighten nuts -arrows B- to brake servo and nut -arrow C- to bulkhead to 25 Nm.
- Tighten strut -1- on mounting bracket and bulkhead to 25 Nm -arrows A-.
- Insert brake pedal.

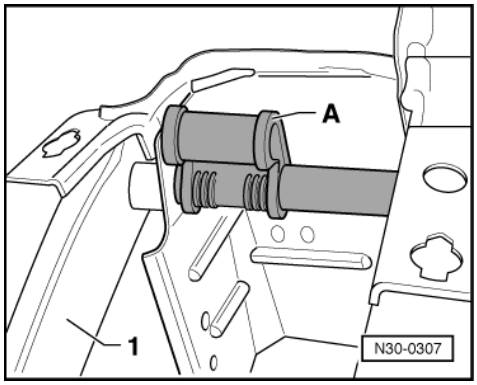

- -> Insert bearing bush -A- for column tube/steering column mounting.

Installation position:

The bearing bush lip -A- is on the clutch pedal side -1- and faces the driver's seat.

- Move clutch and brake pedal pivot pin to the right onto stop.
- Tighten relay carrier to bulkhead.

- Install clutch pedal => from Page 16 .

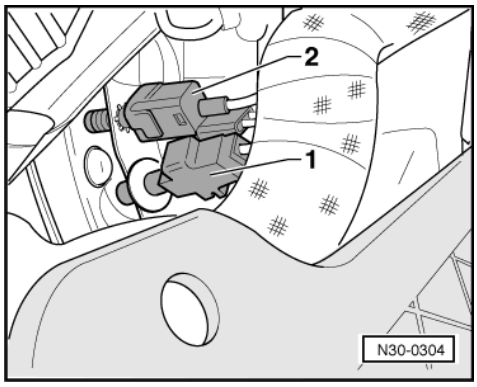

- -> Install and adjust brake light switch -1- and new brake pedal switch -2-.

=> Running gear, ABS self-diagnosis; Repair group 01; Electrical check of ABS, ABS/EDL ITT Mark 20 GI and ITT Mark 20 IE. Electrical check of ABS, ABS/EDL ITT Mark 20 GI and ITT Mark 20 IE.

- Install column tube with steering column.

=> Running gear, Axles, Steering; Repair group 48; Assembly overview: Steering column, column tube, steering wheel and steering wheel with airbag; Removing and installing column tube and steering column Assembly

Protected by copyright. Copying for private or commercial purposes, in part or in whole, is not permitted unless authorised by Volkswagen AG. Volkswagen AG does not guarantee or accept any liability with respect to the correctness of information in this document. Copyright by Volkswagen AG.
satelettronica

overview: Steering column, column tube, steering wheel and steering wheel with airbag Removing and installing column tube and steering column

- Install driver's footwell cover.

=> General body repairs, interior; Repair group 70; Removing and installing dash panel Removing and installing dash panel

- Install driver's stowage compartment.

=> General body repairs, interior; Repair group 68; Stowage compartments, covers, trims Stowage compartments, covers, trims

1.6 - Assembly overview - Hydraulic system

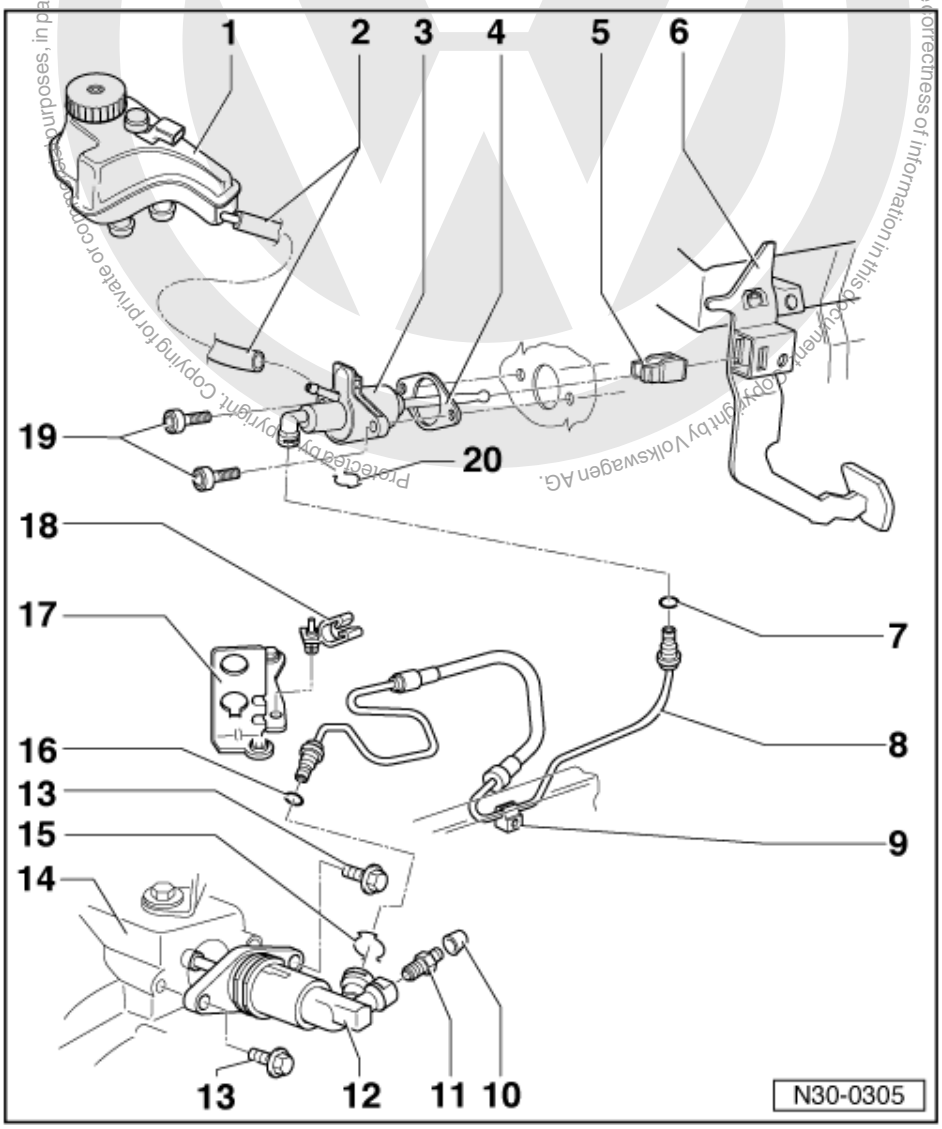

1 Brake fluid reservoir
2 Supply hose
3 Master cylinder
- Removing and installing
  => page 25

4 Seal
- Always renew

Volkswagen AG. Volkswagen AG does not guarantee or accept any liability with respect to the correctness of information in this document. Copyright by Volkswagen AG. Protected by copyright. Copying for private or commercial purposes, in part or in whole, is not permitted unless authorised.

satelettronica

5 Retainer
- Replace only with master cylinder removed
- Removing =>Fig. 1
- Pressing on =>Fig. 2

6 Clutch pedal
- Removing and installing => Page 15

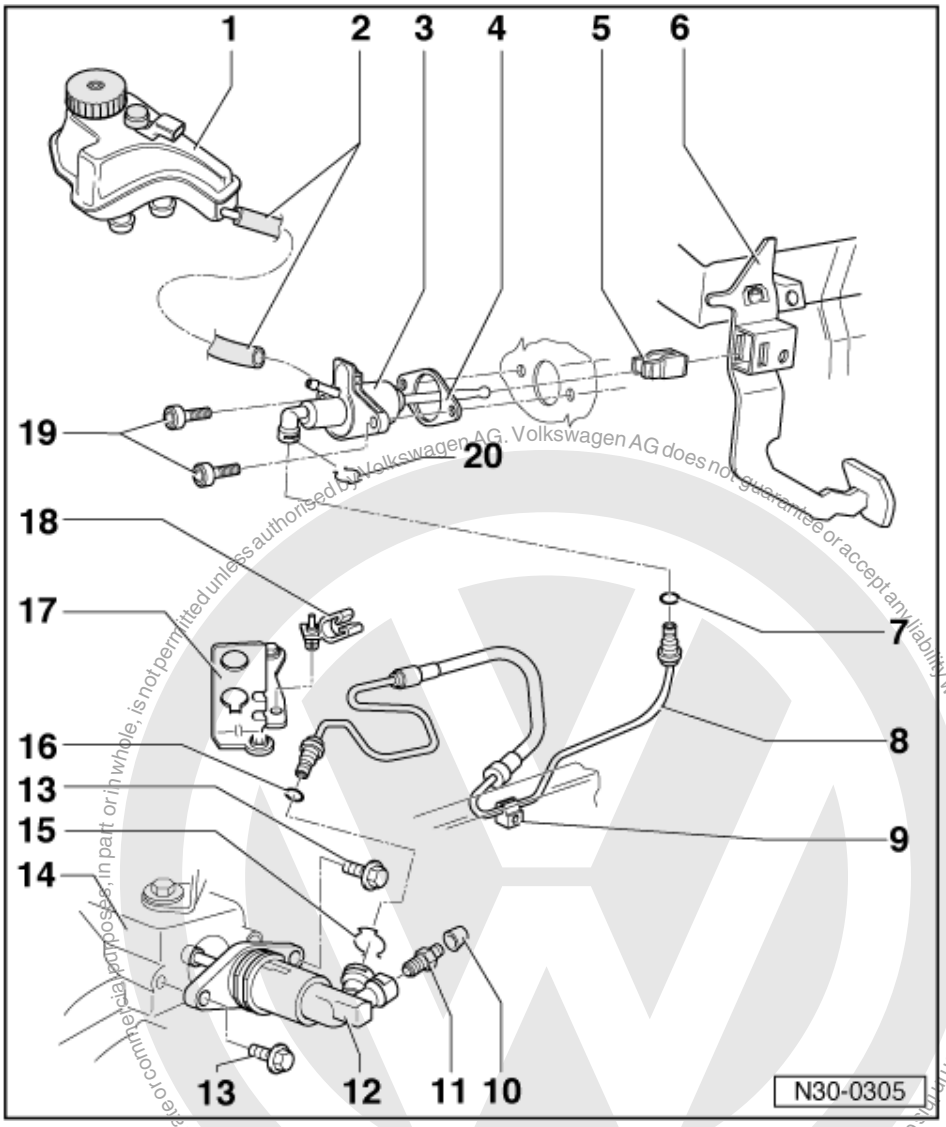

7 Seal
- Pull onto pipe/hose connection
- Insert with brake fluid

8 Pipe/hose assembly
- Allocate using parts catalogue

9 Bracket
- Secured to body

10 Dust cap

11 Bleed valve
- Bleeding clutch system
  => page 27

12 Slave cylinder
- Remove the following components before removing slave cylinder:
- For selector mechanism up to 09.99
- Gear selector cable from gear selector lever =>Page 39
- Relay lever and actuating arm for gate selector cable => Page 41

Protected by copyright. Copyright by Volkswagen AG. Volkswagen AG does not guarantee or accept any liability with respect to the correctness of information in this document. Copyright by Volkswagen AG. Volkswagen AG. In part or in whole, is not permitted unless authorised by Volkswagen AG. Volkswagen AG does not guarantee or accept any liability with respect to the correctness of information in this document. Copyright by Volkswagen AG.
satelettronica

- After installing adjust gear selector mechanism =>Page 52

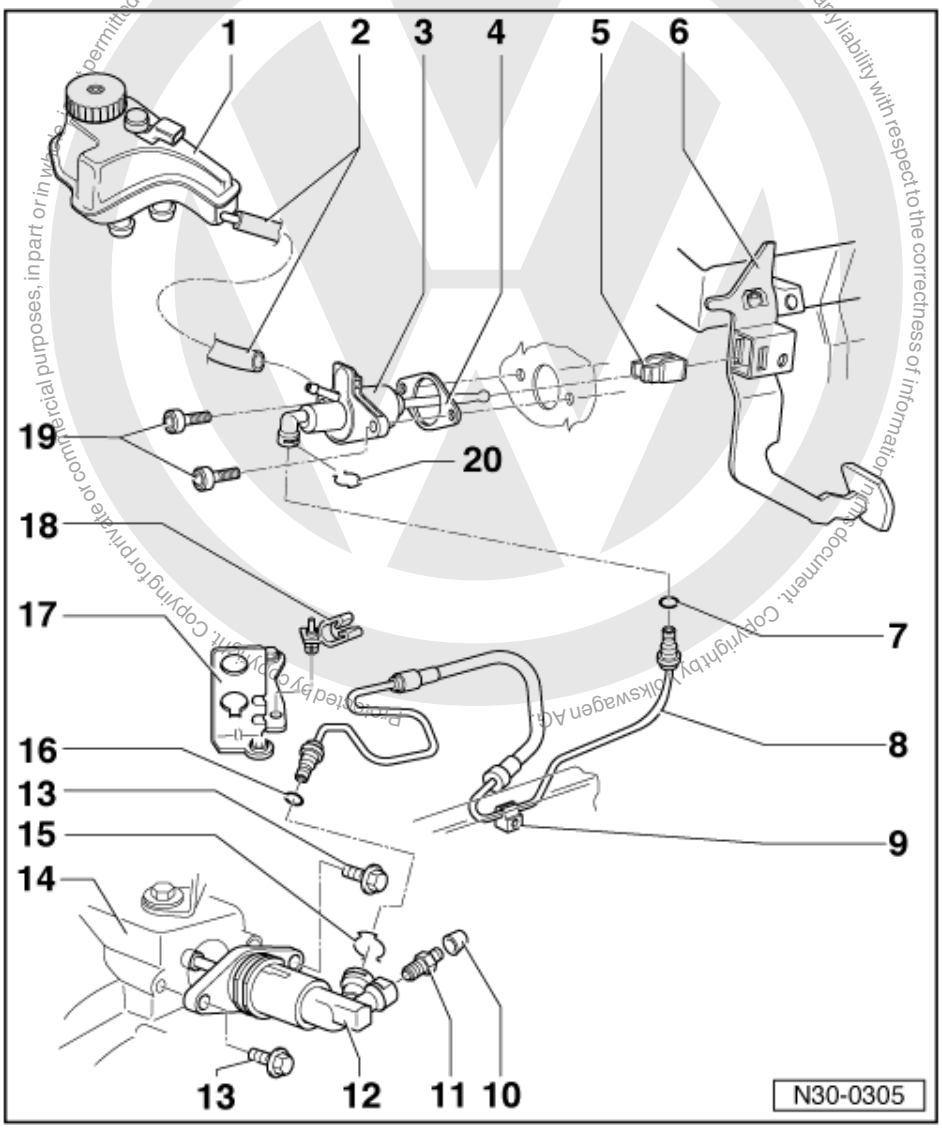

- For selector mechanism from 10.99
- Gear selector cable from gear selector lever =>Page 65
- Relay lever => Page 66
- After installing adjust gear selector mechanism =>Page 70

13 Collared securing bolt, 25 Nm
14 Gearbox
15 Clip
16 Seal
- Pull onto pipe/hose connection
- Insert with brake fluid

17 Support bracket

satelettronica

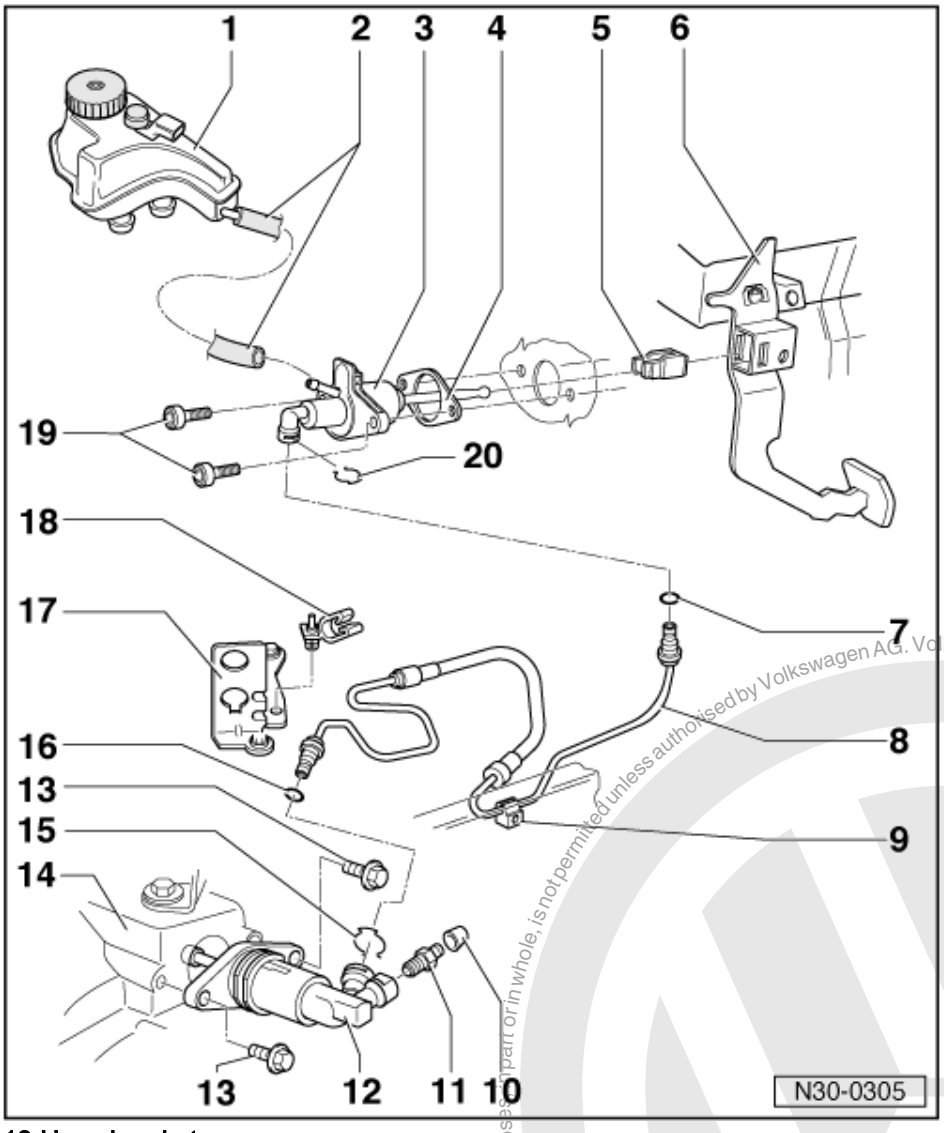

18 Hose bracket

- Secure to control cable/gear selector cable support bracket

19 Hexagon socket head bolt,
25 Nm

20 Clip

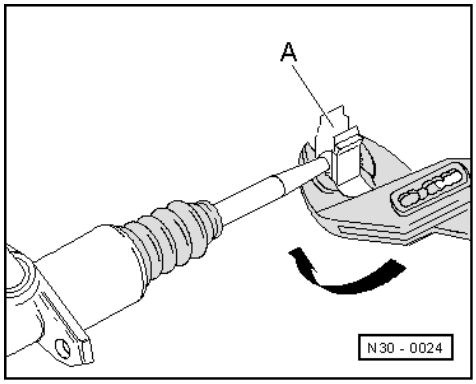

Protected by copyright. Copying for private or commercial purposes, in part or in whole, is not permitted unless authorised by Volkswagen AG. Volkswagen AG does not guarantee or accept any liability with respect to the correctness of information in this document. Copyright by Volkswagen AG.
satelettronica

-> Fig.1 Lever retainer -A- off in direction of arrow

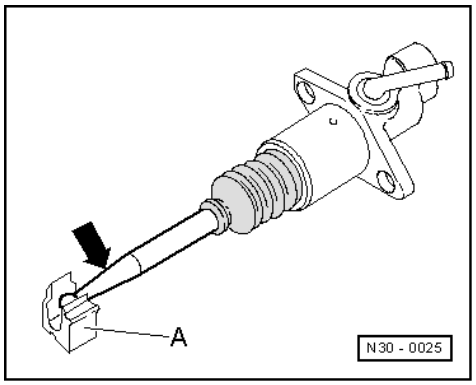

-> Fig.2 Press master cylinder operating rod in retainer -A- in direction of arrow

1.7 - Removing and installing master cylinder

Special tools and workshop equipment required

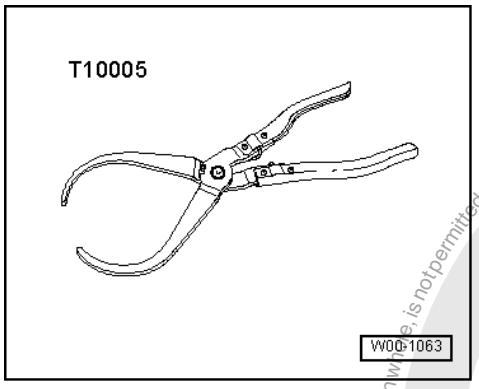

- T10005 Pliers

Removing

- Remove coolant expansion tank and lay to one side.

Note:
Do not open cooling system.

- Remove air cleaner if fitted left in engine compartment

=> Repair group 24; Servicing injection system Servicing injection system

- Place lint-free cloth under the control unit and hydraulic unit.

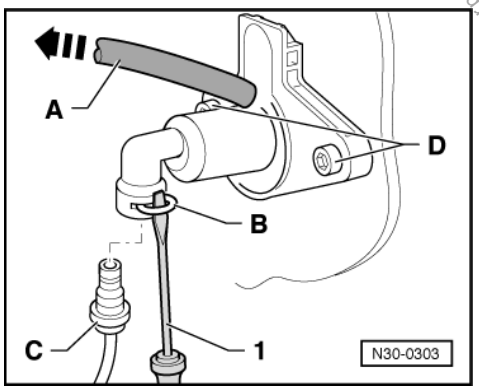

Protected by copyright. Copying for private or commercial purposes, in part or in whole, is not permitted unless authorised by Volkswagen AG. Volkswagen AG does not guarantee or accept any liability with respect to the correctness of information in this document. Copyright by Volkswagen AG.
satelettronica

- -> Pull off return pipe/hose hose -A- to brake fluid reservoir and seal.
- Lever clip -B- for pipe/hose assembly out from master cylinder with a screwdriver -1-.
- Pull pipe/hose assembly -C- out from master cylinder and seal.
- Remove bolts -D-.
- Take lower trims off lighting switch and steering column and remove driver's stowage compartment.

=> General body repairs, interior; Repair group 68; Stowage compartments, covers, trims Stowage compartments, covers, trims

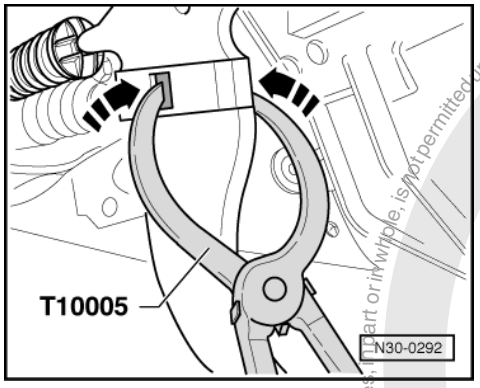

- Remove driver's footwell cover.

=> General body repairs, interior; Repair group 70; Removing and installing dash panel Removing and installing dash panel

-> Separate master cylinder operating rod from clutch pedal as follows:

- Carefully pull clutch pedal towards passenger compartment.
- Press both sides of mounting inwards using pliers T10005 (arrows).
- Pull piston rod with mounting out of pedal forwards.

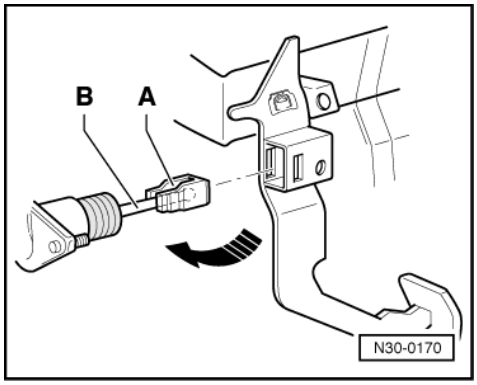

- Take out master cylinder from engine compartment.

Installing

Installation is carried out in the reverse sequence, when doing this note the following:

- -> The retainer -A- must be fitted to the master cylinder operating rod -B-.
- To engage press clutch pedal towards bulkhead (direction of arrow). Ensure correctly located.
- Bleeding clutch system after installing master cylinder=>page 27 .

Protected by copyright. Copyright by Volkswagen AG.
Copyright by Volkswagen AG. Volkswagen AG does not guarantee or accept any liability with respect to the correctness of information in this document.
Copying for commercial purposes, in part or in whole, is not permitted unless authorised by Volkswagen AG.
satelettronica

1.8 - Bleeding clutch system

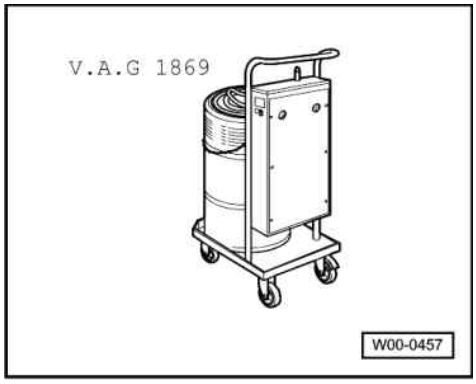

Special tools and workshop equipment required

- V.A.G. 1869 Brake filling and bleeding unit

- Brake fluid specifications.

=> Brake systems; repair group 47 Booklet, Bleeding brake system, vehicles with or without ABS

- To bleed system use bleed hose V.A.G 1238/B 3 - 670 mm long, if necessary.

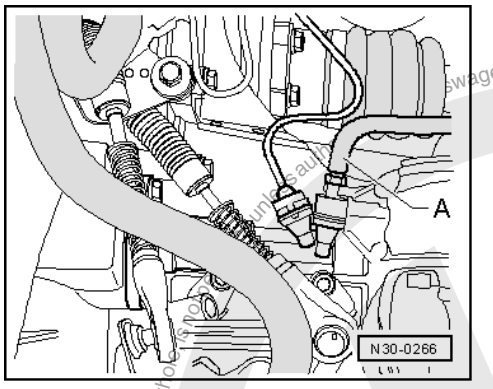

- Connect bleed hose to brake bleeding appliance collector bottle.
- -> Connect bleed hose -A- to slave cylinder and open bleed valve.
- Depress clutch pedal several times after completion of bleeding process.

Protected by copyright. Copying for private or commercial purposes, in part or in whole, is not permitted unless authorised by Volkswagen AG. Volkswagen AG does not guarantee or accept any liability with respect to the correctness of information in this document. Copyright by Volkswagen AG.
satelettronica

2 - Servicing clutch release mechanism

2.1 - Servicing clutch release mechanism

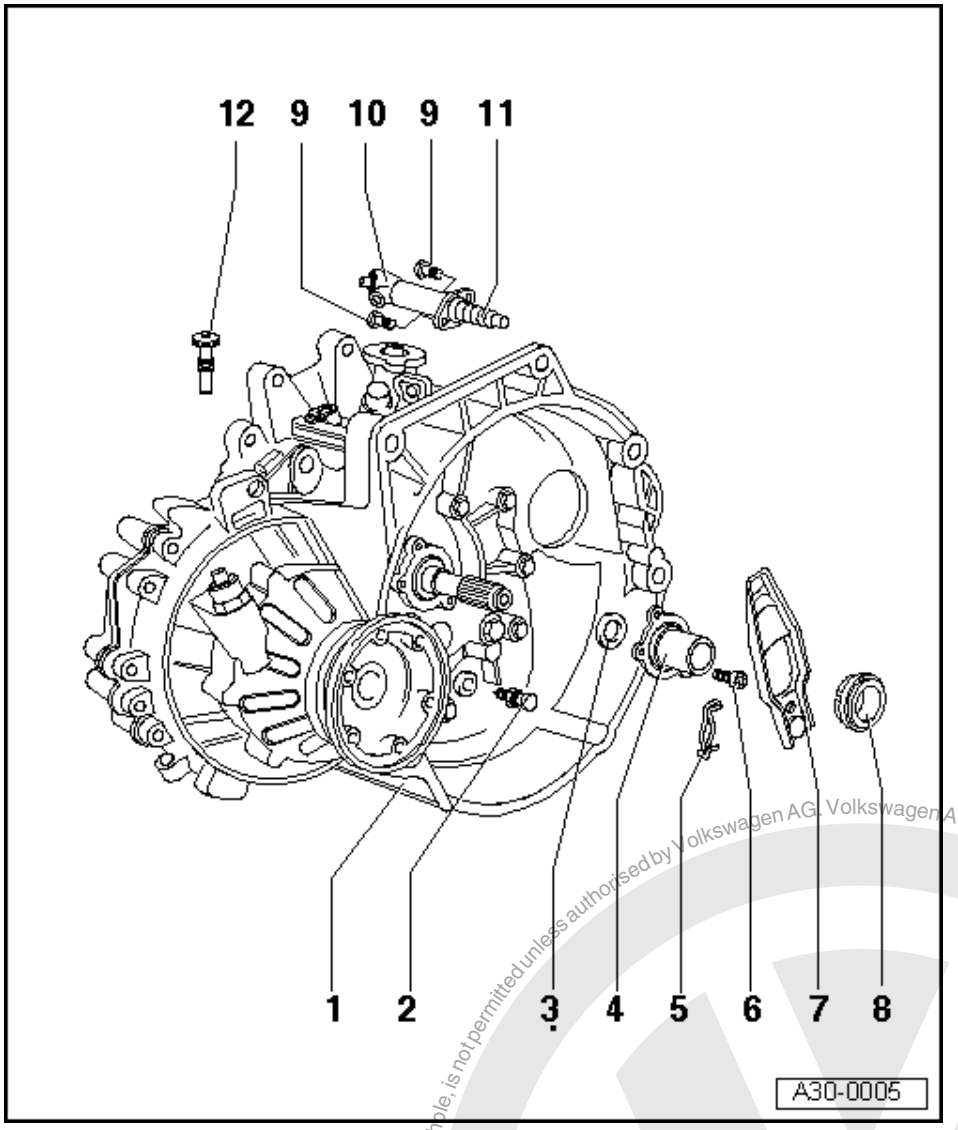

1 Gearbox
2 Ball stud, 25 Nm
- Lubricate with MoS2 grease

3 Input shaft oil seal
- Renewing => Page 122

4 Guide sleeve
- With vulcanised O-ring
- If damaged replace guide sleeve and O-ring together
- Lubricate guide sleeve in area of release bearing with MoS2 grease

5 Retaining spring
- Secure to clutch release lever

satelettronica
Protected by copyright. Copying for private or commercial purposes, in part or in whole, is not permitted unless authorised by Volkswagen AG. Volkswagen AG does not guarantee or accept any liability with respect to the correctness of information in this document. Copyright by Volkswagen AG.

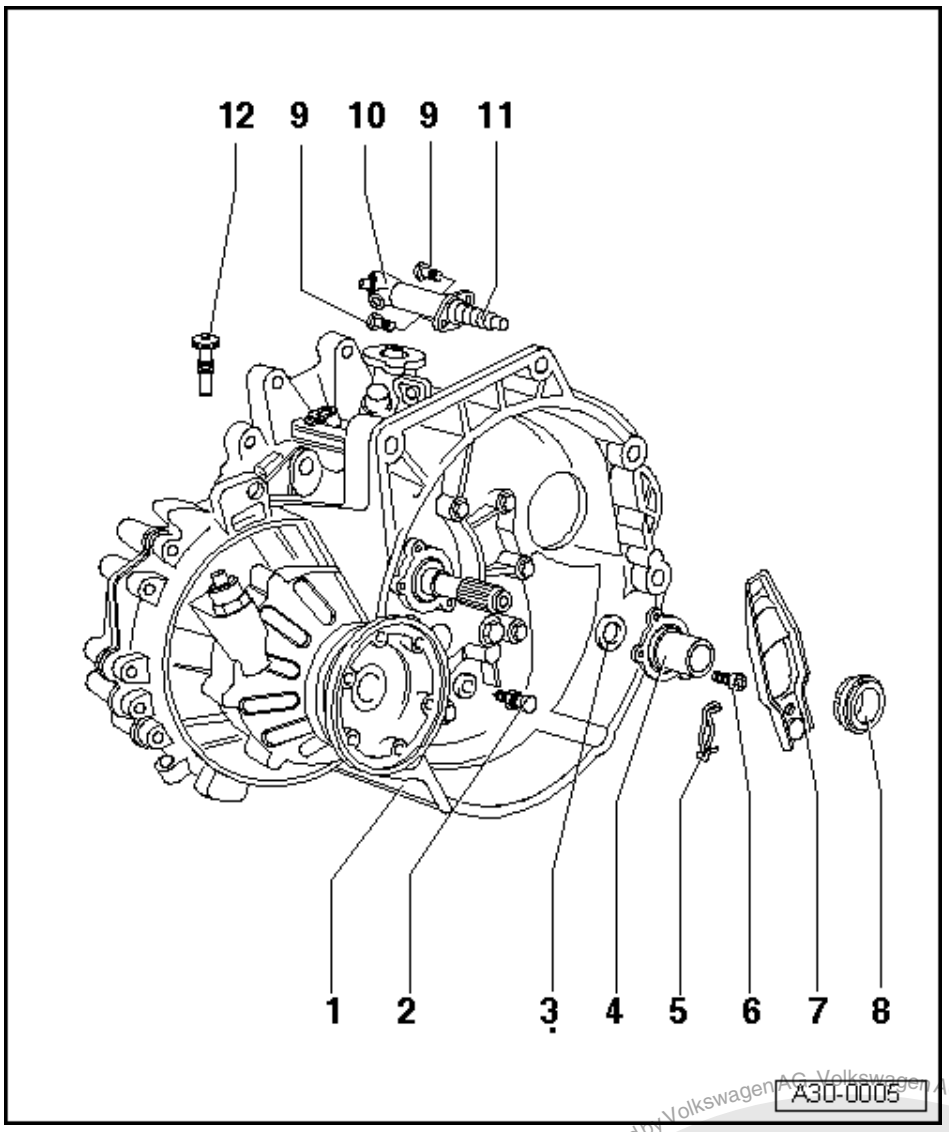

6 Securing bolt, 20 Nm
7 Clutch release lever
8 Release bearing
- Do not wash-out bearing, only wipe
- Renew noisy bearings
- Lubricate surfaces which contact release lever with MoS2 grease

9 Securing bolt, 20 Nm
10 Slave cylinder
- Removing and installing
  => Page 22

11 Plunger
- Grease end of plunger with MoS2 grease

satelettronica
Protected by copyright. Copying for private or commercial purposes, in part or in whole, is not permitted unless authorised by Volkswagen AG. Volkswagen AG does not guarantee or accept any liability with respect to the correctness of information in this document. Copyright by Volkswagen AG.

Copyright by Volkswagen AG. Volkswagen AG does not guarantee or accept any liability with respect to the correctness of information in this document. Copyright by Volkswagen AG. Protected by copyright. Reproduction for private or commercial purposes, in part or in whole, is not permitted unless authorised by Volkswagen AG.

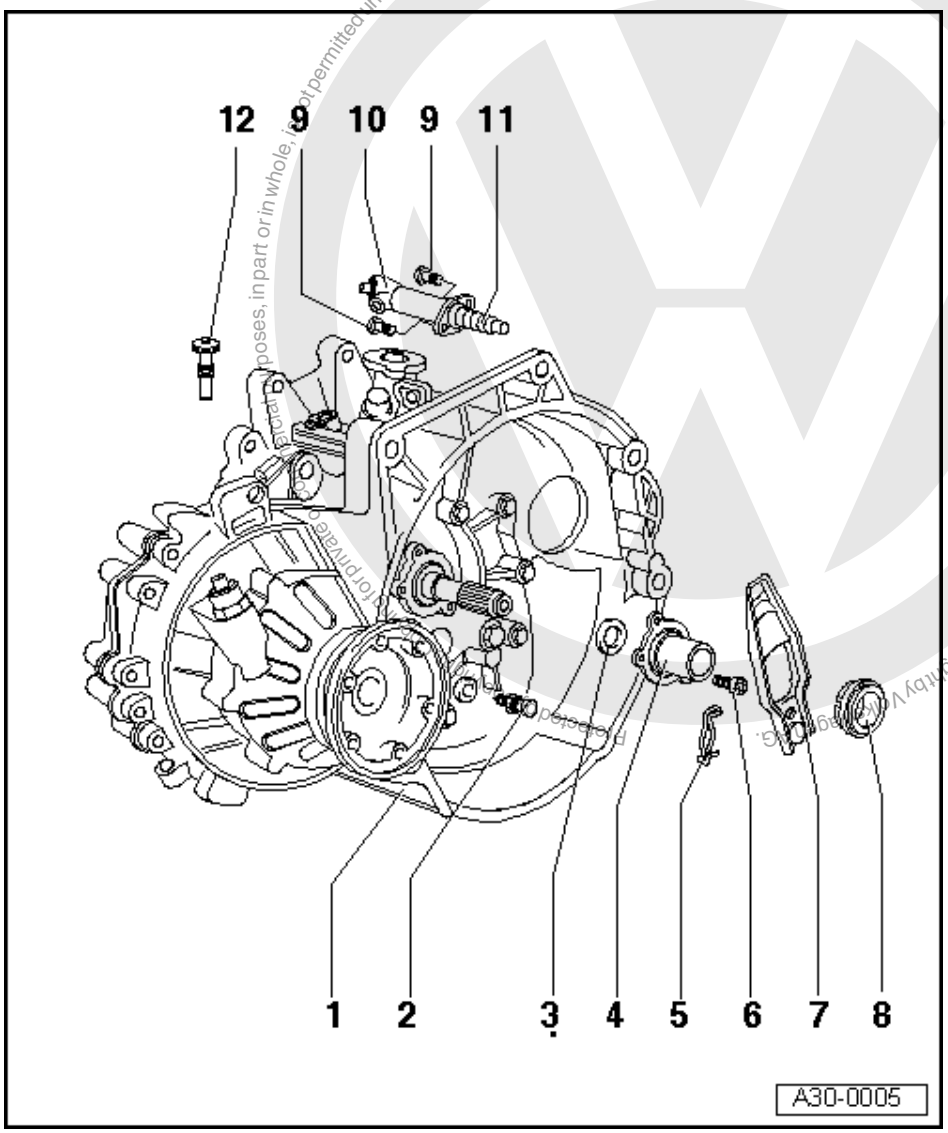

12 Assembly bolt

- Secures the clutch release lever when installing gearbox
- Unscrew after gearbox has been installed

Note:

If the assembly bolt (Item 12) is not available, an M 8 x 35 bolt can be used.

satelettronica

3 - Servicing clutch

3.1 - Servicing clutch

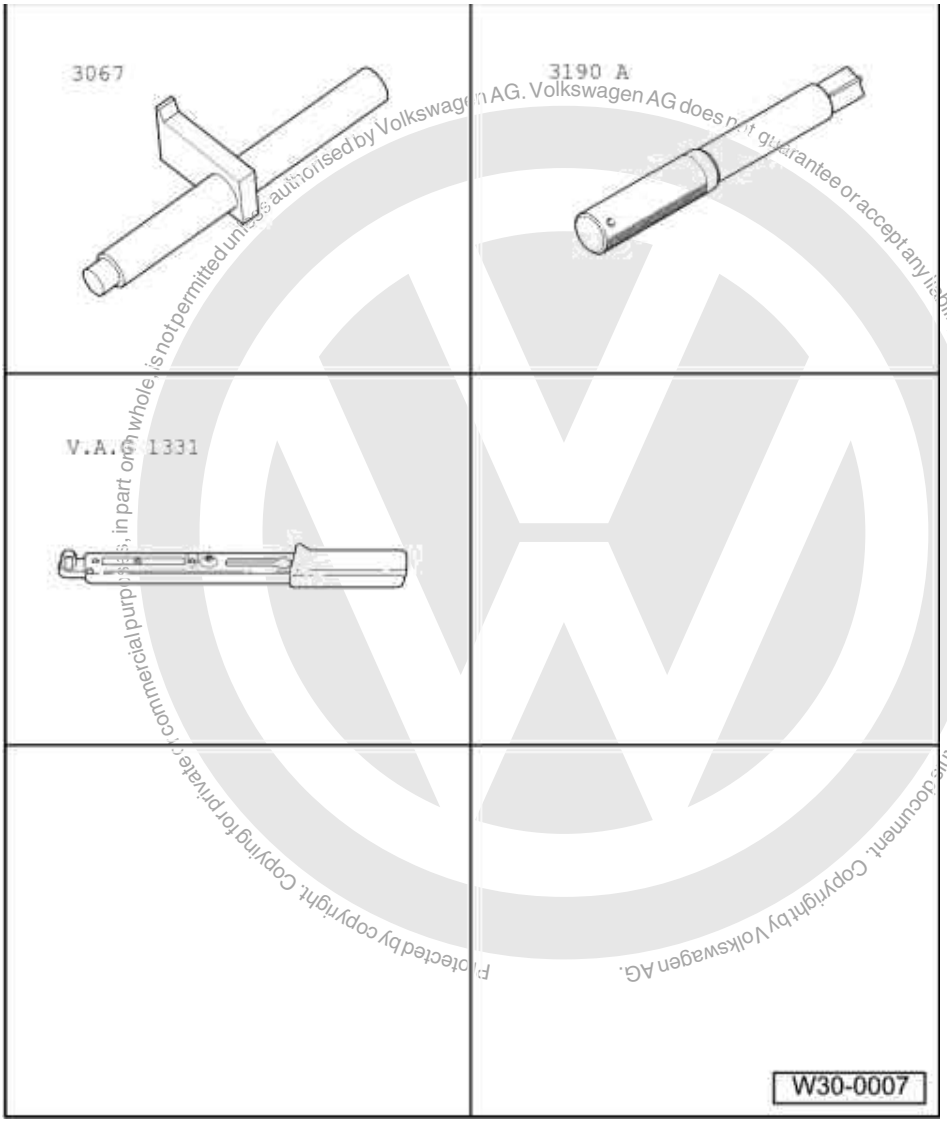

Protected by copyright. Copying for private or commercial purposes, in part or in whole, is not permitted unless authorised by Volkswagen AG. Volkswagen AG does not guarantee or accept any liability with respect to the correctness of information in this document. Copyright by Volkswagen AG.

satelettronica

Special tools and workshop equipment required

- 3067 Counter-hold
- 3190 A Centralizing mandrel
- V.A.G 1331 Torque wrench

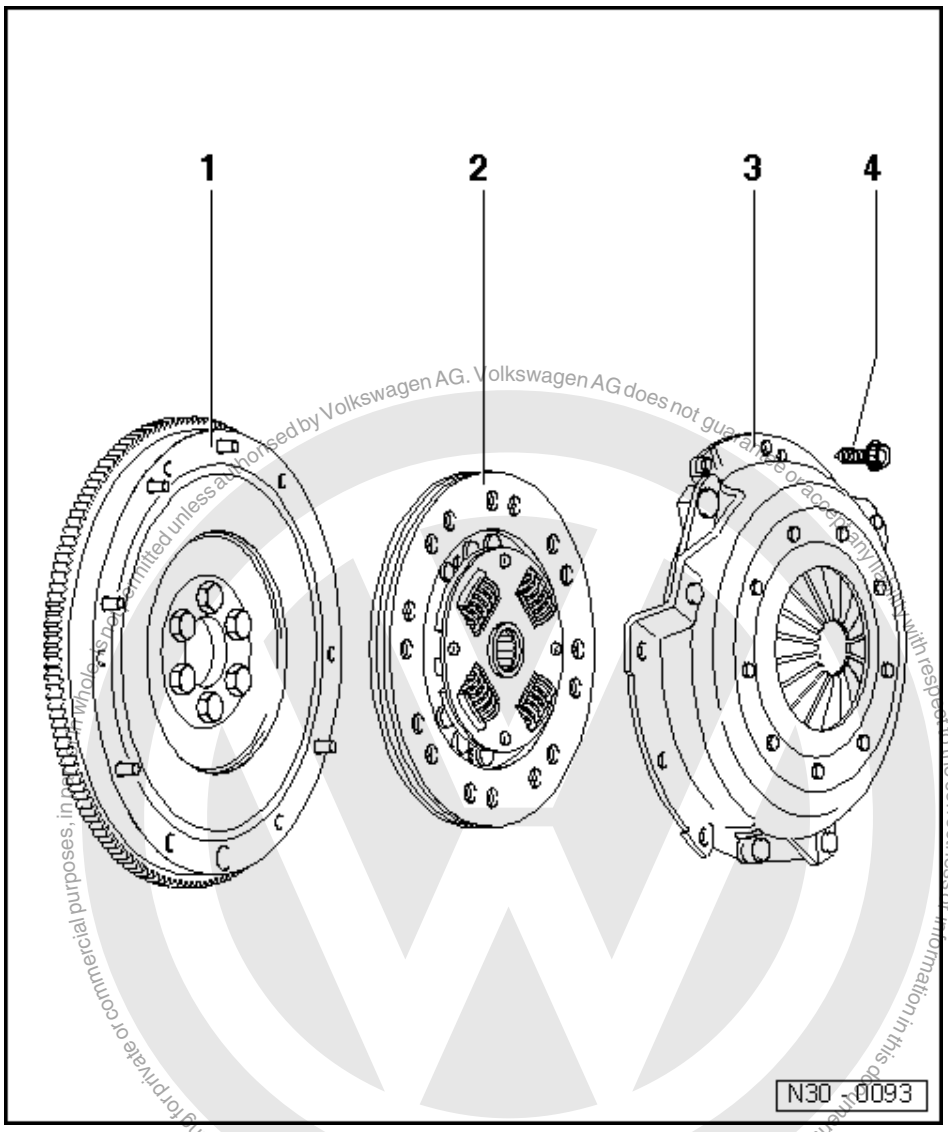

Notes:

- Before replacing the clutch and pressure plate note fault finding transmission No.9 - Defects on the clutch and clutch mechanism
- Replace clutch plates and pressure plates with damaged or loose rivets
- Select correct clutch plate and pressure plate according to parts list and engine code.

1 Flywheel
  - Ensure centring pins are a tight fit
  - Contact surface for clutch lining must be free of grooves, oil and grease
  - Removing and installing

=> Repair group13; Removing and installing sealing flange and flywheel/drive plate

satelettronica

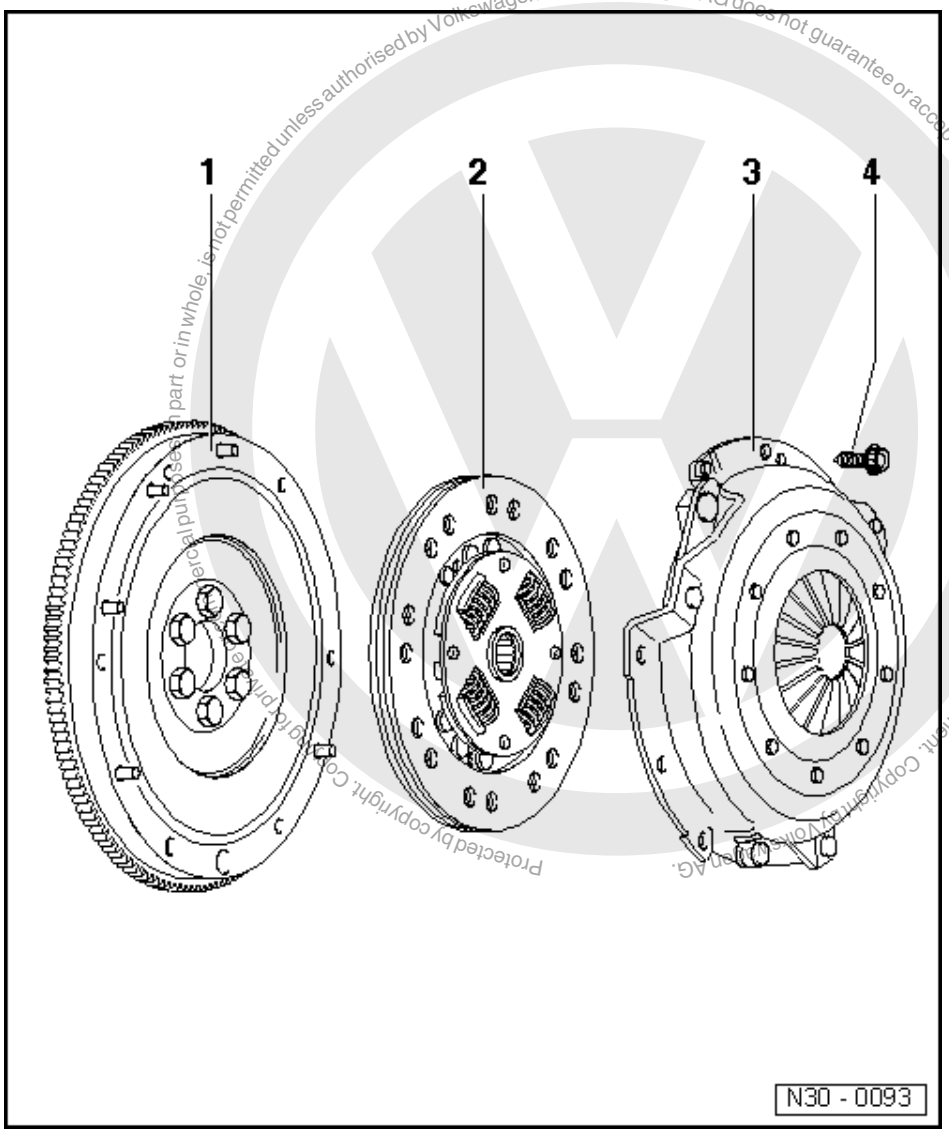

2 Clutch plate

- Diameter
  =>from page 2
- Installation position: spring cage faces the pressure plate
- Centring => Fig. 1
- Lightly grease splines

Note:

Clean input shaft splines and on used clutch plates, the hub splines, remove corrosion and apply only a very thin coating of grease Part No: G 000 100 to the input shaft splines. Then move clutch plate to and fro on input shaft until hub moves freely on shaft. Excess grease must be removed.

Protected by copyright. Copying for private and commercial purposes, in part or in whole, is not permitted unless authorised by Volkswagen AG. Volkswagen AG does not guarantee or accept any liability with respect to the correctness of information in this document. Copyright by Volkswagen AG.

satelettronica

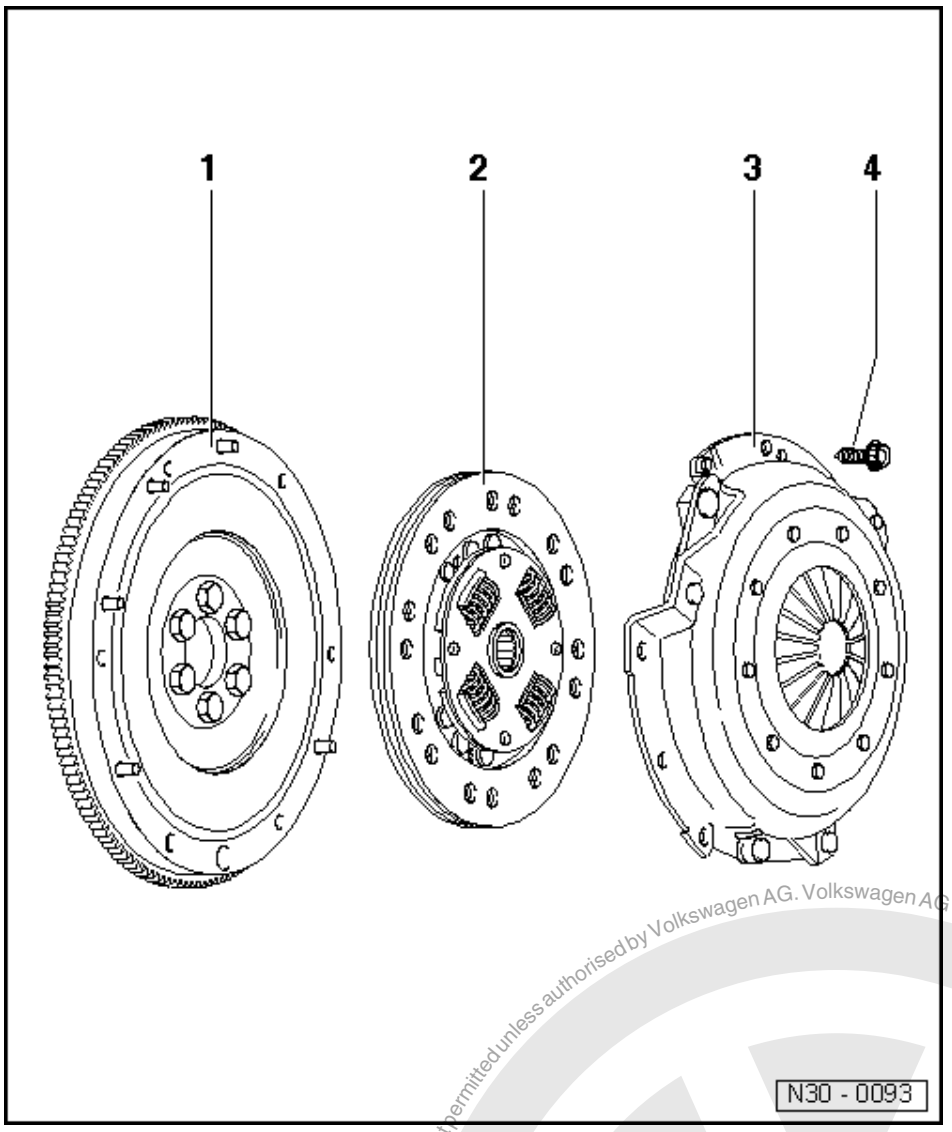

3 Pressure plate

- Removing and installing => Fig. 1
- Check ends of diaphragm spring => Fig. 2

Note:

Pressure plates are protected against corrosion and greased. Only the contact surface may be cleaned, otherwise the service life of the clutch will be considerably reduced.

4 Bolt

- Allocate using parts catalogue
- 20 Nm
- Loosen and tighten gradually and diagonally

Protected by copyright. Copying for private or commercial purposes, in part or in whole, is not permitted unless authorised by Volkswagen AG. Volkswagen AG does not guarantee or accept any liability with respect to the correctness of information in this document. Copyright by Volkswagen AG.
satelettronica

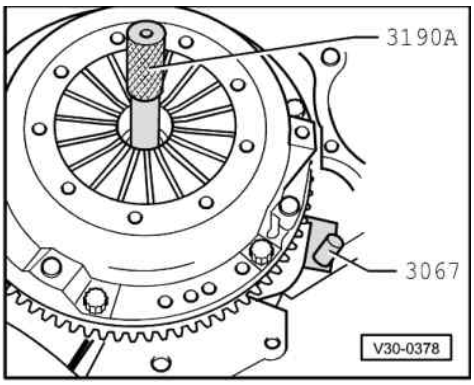

-> Fig.1 Centring clutch plate and removing and installing pressure plate

- Loosen and tighten bolts gradually and diagonally.
- Reverse position of retainer 3067 when removing.

Note:

Pressure plate contact surface and clutch plate must make full contact with flywheel. Tighten bolts diagonally and evenly to prevent damage to the centring holes in the pressure plate housing and the centring pins in the flywheel.

Copyright by Volkswagen AG. Volkswagen AG does not guarantee or accept any liability with respect to the correctness of information in this document. Copyright by Volkswagen AG. Reproduced by copyright. Copying for private or commercial purposes, in part or in whole, is not permitted unless authorised by Volkswagen AG.

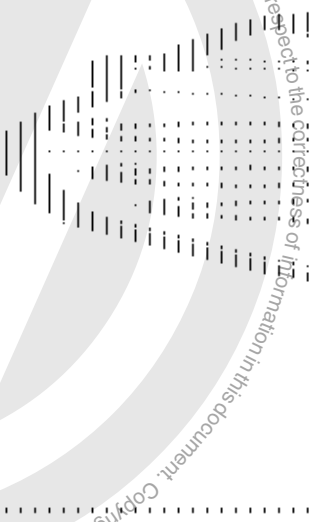

-> Fig.2 Checking ends of the diaphragm spring

- Wear up to half the thickness of the diaphragm spring is permitted.

satelettronica

34 - Controls, Housing

Protected by copyright. Copying for private or commercial purposes, in part or in whole, is not permitted unless authorised by Volkswagen AG. Volkswagen AG does not guarantee or accept any liability with respect to the correctness of information in this document. Copyright by Volkswagen AG.

1 - Servicing gear selector mechanism up to 09.99

1.1 - Servicing gear selector mechanism up to 09.99

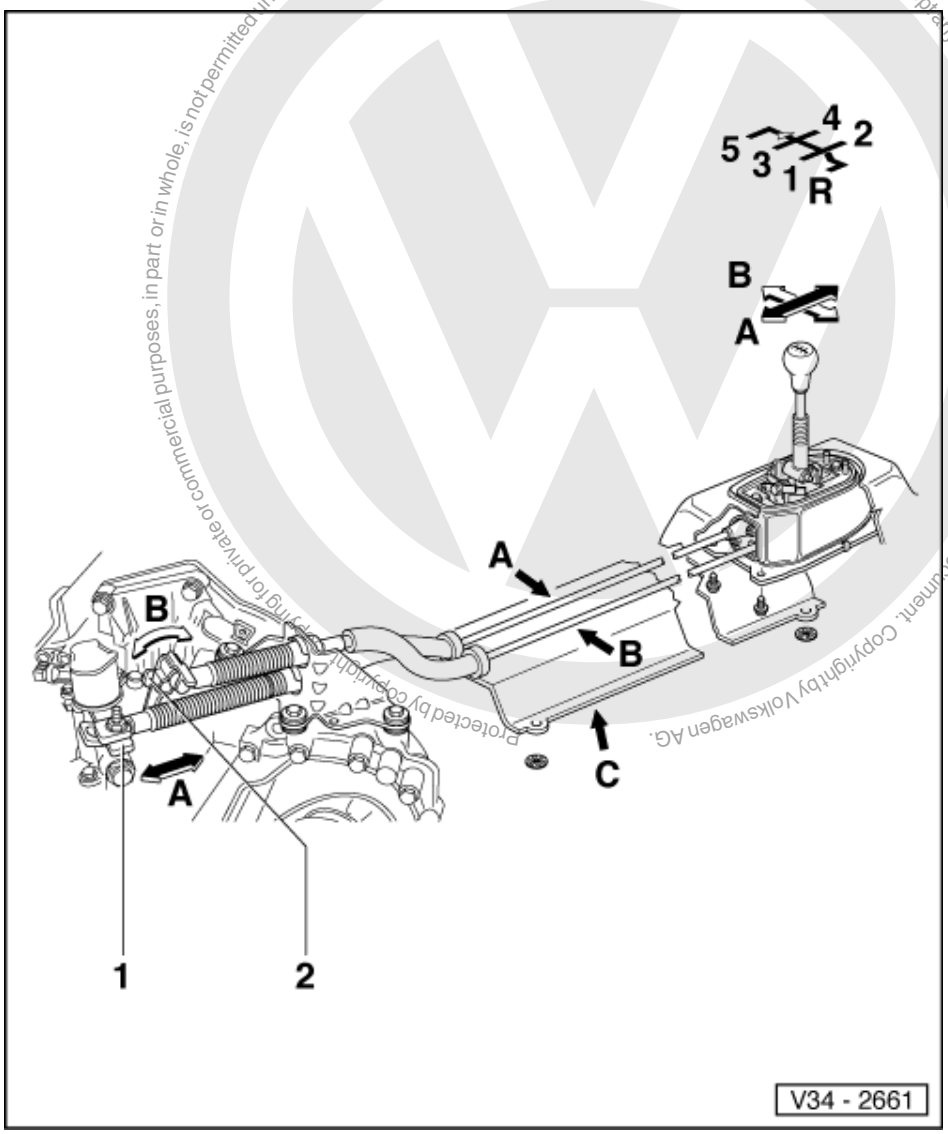

1.2 - Installation position of gear selector mechanism

A - Gear change cable
B - Gate selector cable
C - Heat shield

- Remove before removing the gear selector mechanism.

Arrow -A- Gear selection movement

satelettronica

Arrow -B- Gate selection movement

1 Gear selector lever
2 Relay lever with actuating arm/gate selector cable

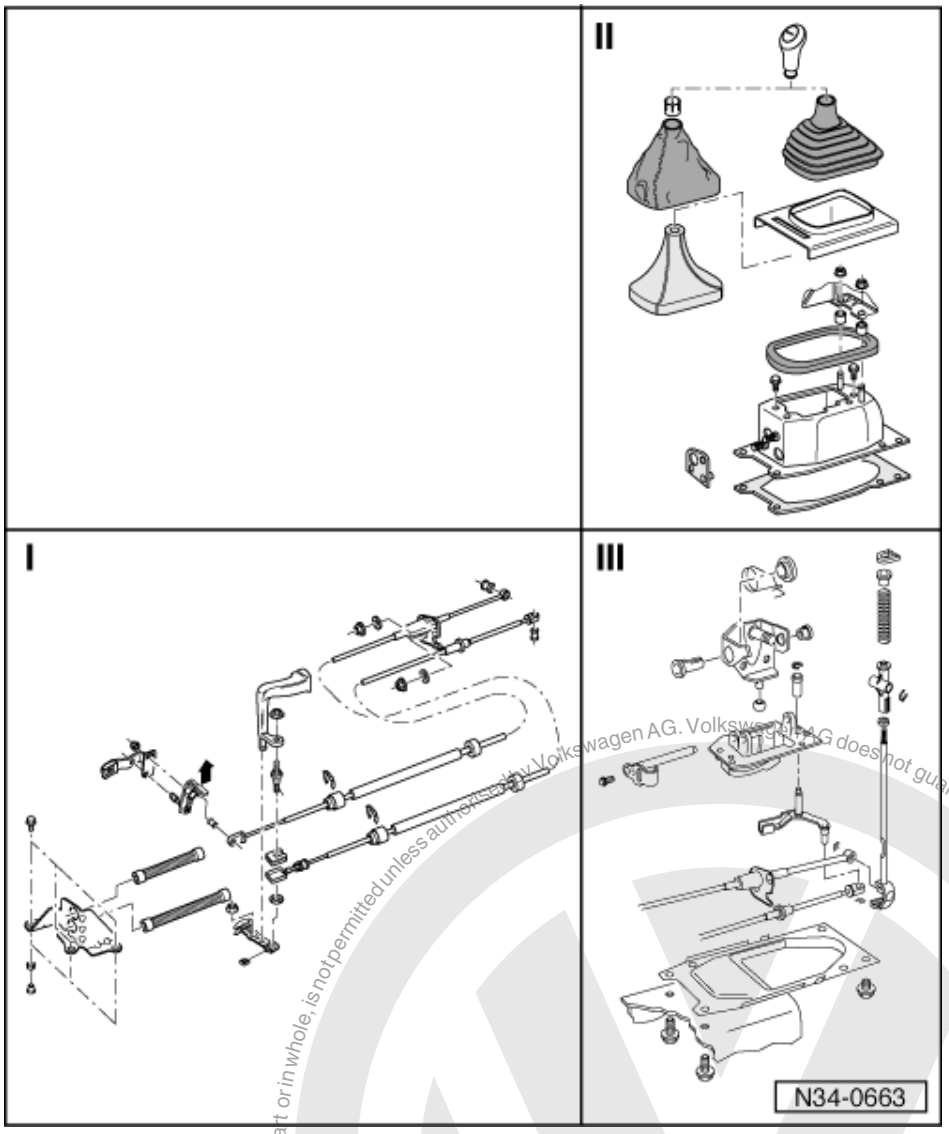

I - Removing and installing gear selector control cables => Page 39
II - Removing and installing gear stick housing => Page 59
III - Removing and installing gear lever => Page 48

Adjusting gear selector mechanism up to 09.99 => Page 52

- Before removing the gear selector mechanism, separate exhaust system behind catalyst

Notes:

- Before working on the selector mechanism, disconnect earth strap from the battery in the engine compartment.
- Note radio code on vehicles with coded radio.
- To replace the selector cables remove gear selector mechanism complete.
- Do not kink selector cables.

Protected by copyright. Copying for private or commercial purposes, in part or in whole, is not permitted unless authorised by Volkswagen AG. Volkswagen AG does not guarantee or accept any liability with respect to the correctness of information in this document. Copyright by Volkswagen AG.
satelettronica

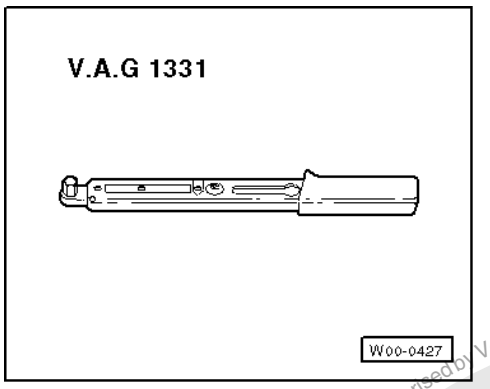

Special tools and workshop equipment required

- V.A.G 1331 Torque wrench

1.3 - Removing and installing gear selector cables

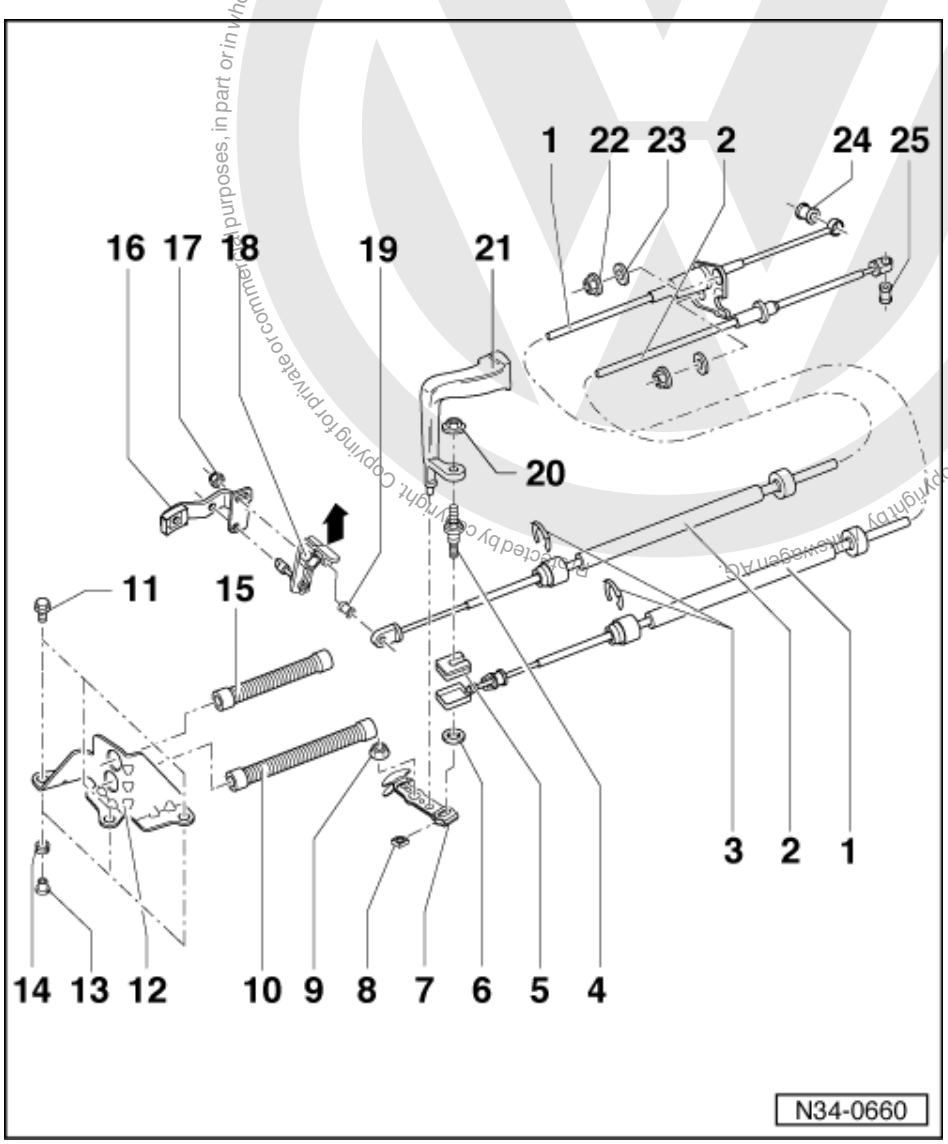

Copyright by Volkswagen AG. Volkswagen AG does not guarantee or accept any liability with respect to the correctness of information in this document. Copyright by Volkswagen AG. Copying for private or commercial purposes, in part or in whole, is not permitted unless authorised by Volkswagen AG.
satelettronica

Protected by copyright. Copying for private or commercial purposes, in part or in whole, is not permitted unless authorised by Volkswagen AG. Volkswagen AG does not guarantee or accept any liability with respect to the correctness of information in this document. Copyright by Volkswagen AG.

Note:

Lubricate all mountings and sliding surfaces with Polyurea grease Part No. G 052 142 A2.

1 Gear selector cable
- Installation position => Page 36

2 Gate selector cable
- Pull off actuating arm (item 18) by pulling lug in direction of arrow
- Installation position => Page 36
- Install before installing gear selector cable

3 Circlip
- When removing do not damage bellows

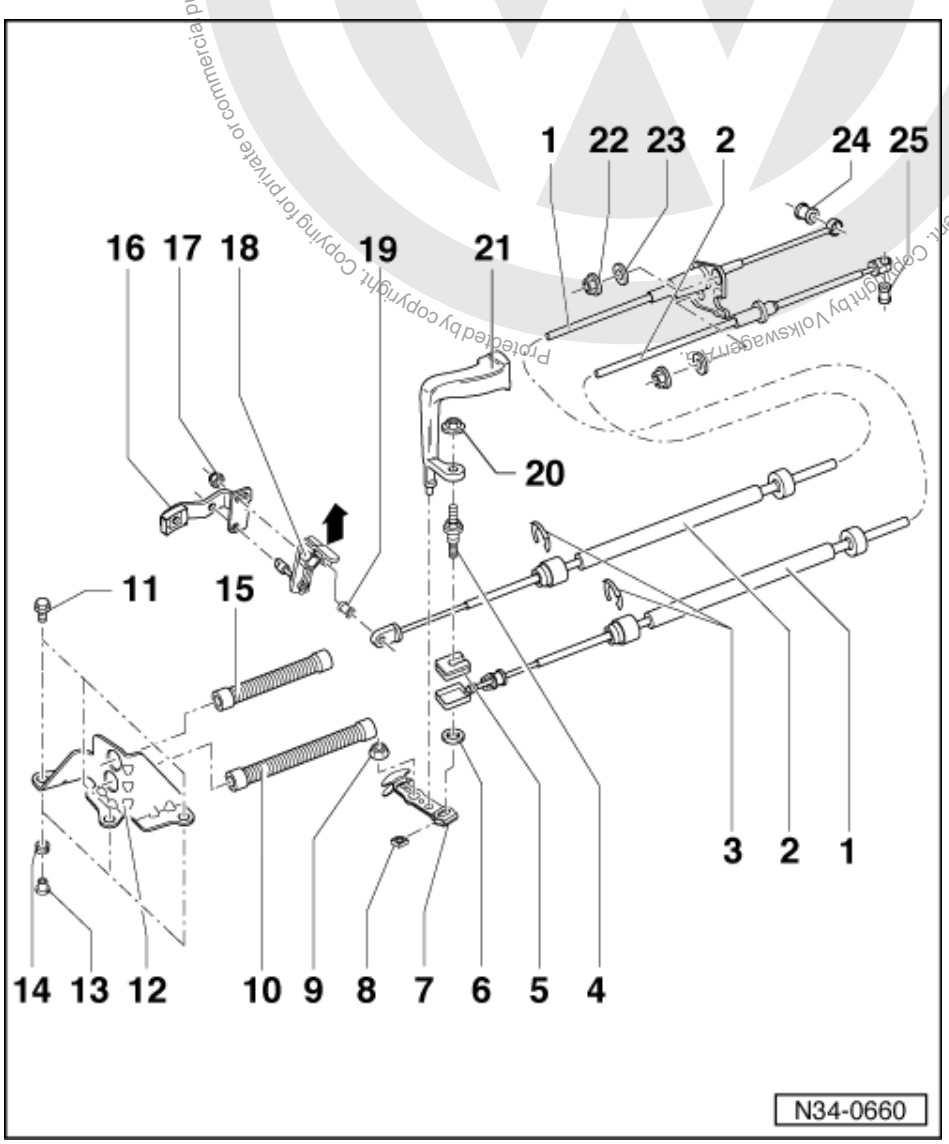

4 Hexagon combi bolt, 25 Nm
- With shoulder
- Gear selector cable to gear change lever

5 Rubber bush
- For gear change cable to gear selector lever
- To renew bellows press out of end piece

6 Washer
- Install between gear selector cable and gear selector lever

satelettronica

7 Gear selector lever
- Only fits in one position
- After installing adjust gear selector mechanism => Page 52
- Installation position => Page 43

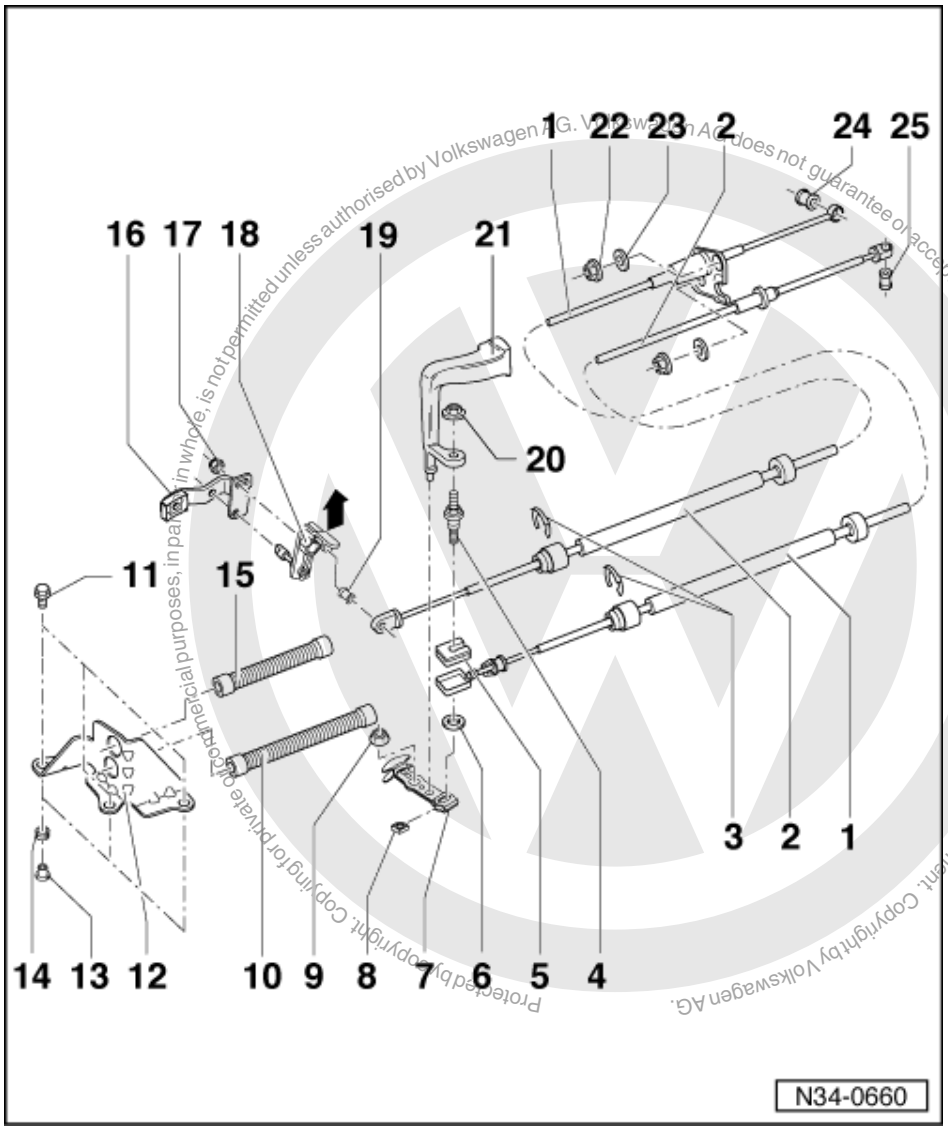

8 Square nut
- Insert into gear selector lever

9 Self-locking hexagon nut, 25 Nm
- For gear selector lever

10 Bellows
- Carefully pull over gear selector cable end piece
- Use MoS2 grease

11 Hexagon bolt, 25 Nm
- For support bracket

12 Support bracket

13 Distance piece

14 Bush
- Support bracket mounting to gearbox

satelettronica

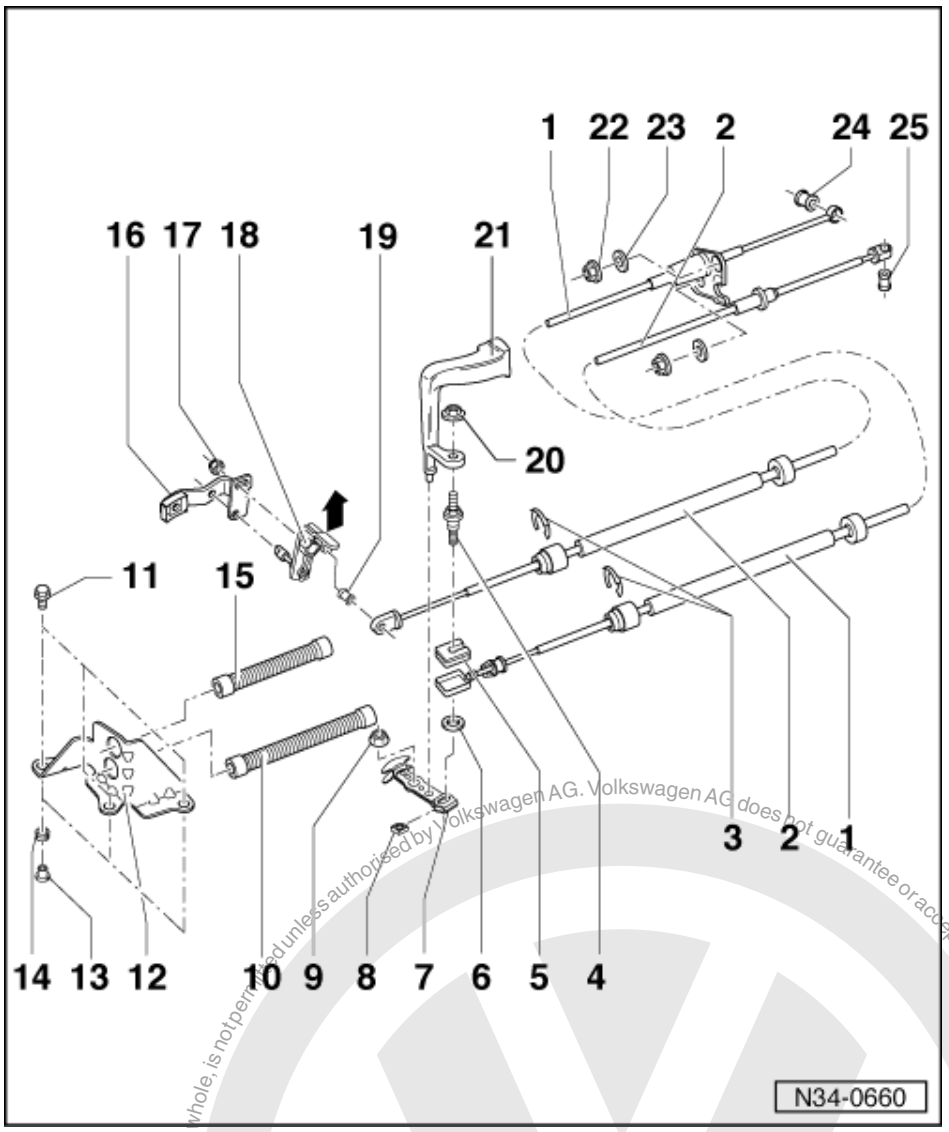

15 Bellows
- Carefully pull over gear selector cable end piece
- Use MoS2 grease

16 Relay lever
- Remove before removing clutch control
- Installation position => Page 43
- Servicing => Page 131

17 Self-locking hexagon nut, 15 Nm
- For relay lever to actuating arm
- Only loosen to adjust selector mechanism

18 Actuating arm
- With pivot pin to mount relay lever
- Installation position => Page 43
- Servicing => Page 131

Protected by copyright. Copying for private or commercial purposes, in part or in whole, is not permitted unless authorised by Volkswagen AG. Volkswagen AG does not guarantee or accept any liability with respect to the correctness of information in this document. Copyright by Volkswagen AG.
satelettronica

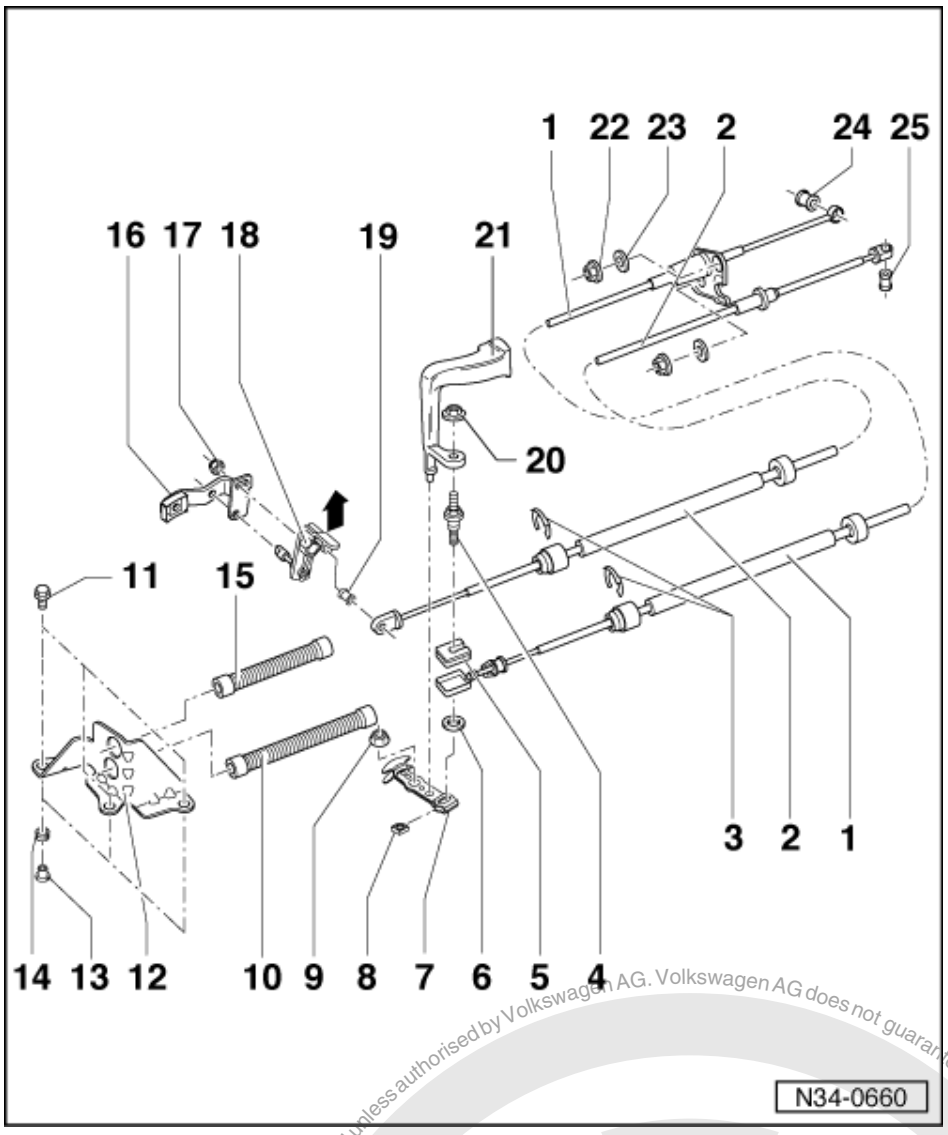

19 Rubber bush
- For gate selector cable to actuating arm
- Press in and out with drift

20 Self-locking hexagon nut, 30 Nm
- For balance weight

21 Balance weight
- Remove to adjust selector mechanism

22 Self-locking hexagon nut, 15 Nm
- For selector cable to selector housing

23 Rubber washer

24 Rubber bush
- For gear selector cable/gear change lever
- Press in and out with drift

25 Rubber bush
- For gate selector cable/selector bracket
- Press in and out with a drift

Protected by copyright. Copying for private or commercial purposes, in whole or in part, is not permitted unless authorised by Volkswagen AG. Volkswagen AG does not guarantee or accept any liability with respect to the correctness of information in this document. Copyright by Volkswagen AG.
satelettronica

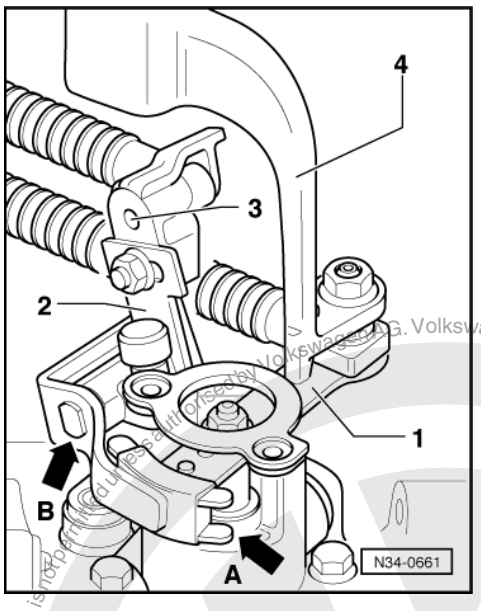

-> Installation position gear selector lever/relay lever actuating arm/balance weight

1 - Gear selector lever
2 - Relay lever
Locates in guide rail of gear shift lever (arrow -A-)
Lubricate with MoS2 grease
3 - Actuating arm
Flats (arrow -B-) of axis face mounting, relay lever only fits in one position
4 - Balance weight
Bolt on to gear selector lever

Note:

For ease of illustration the linkage and switch for reverse light have been removed.

Protected by copyright. Copying for private or commercial purposes, in part or in whole, is not permitted unless authorised by Volkswagen AG. Volkswagen AG does not guarantee or accept any liability with respect to the correctness of information in this document. Copyright by Volkswagen AG.
satelettronica

1.4 - Removing and installing gear stick housing

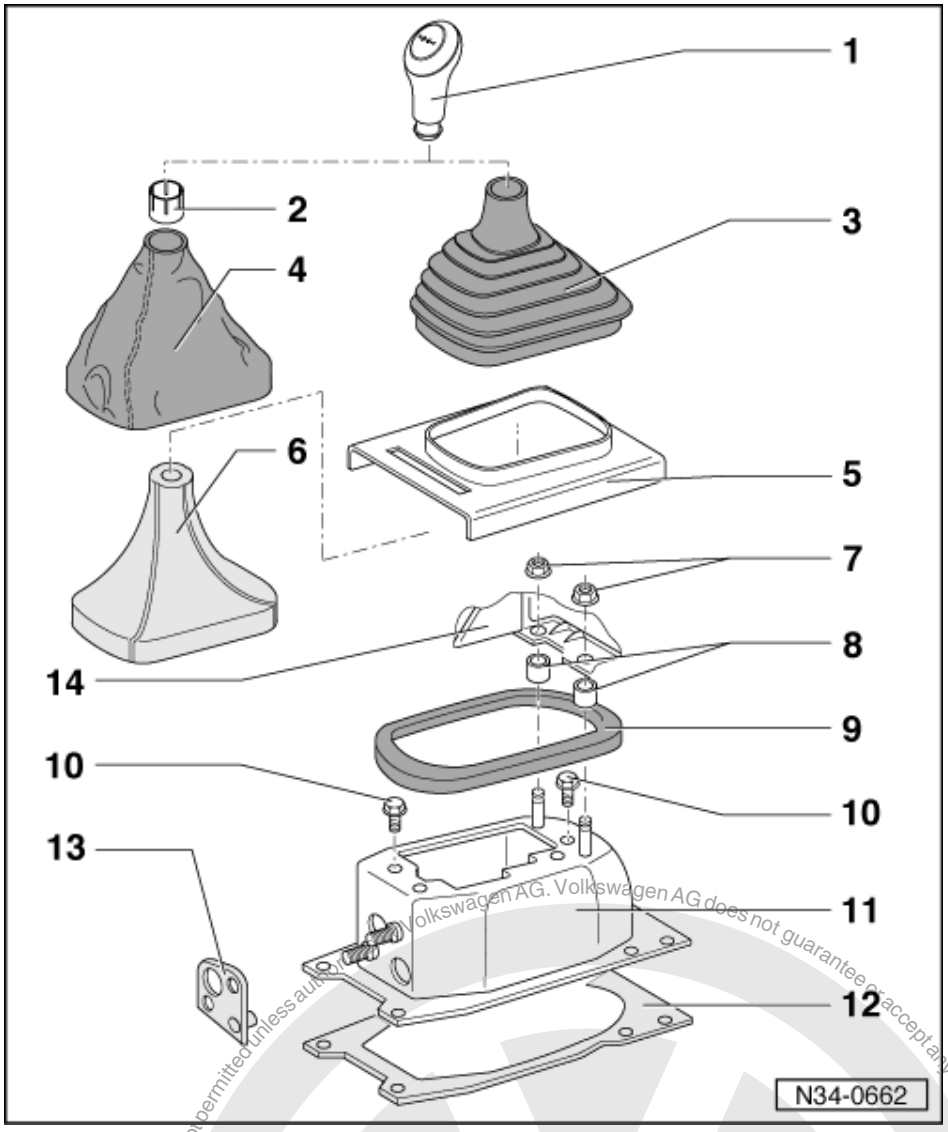

1 Selector lever knob
2 Sleeve
3 Rubber cover
- Connect to gear stick knob before installing =>Page 47

4 Leatherette gaiter
- Pull off from frame
- Connect to gear stick knob before installing =>Page 47

5 Frame
- Pull off centre console upwards

6 Boot
- Not fitted to all vehicles
- Pull off frame to remove

Protected by copyright. Copying for private or commercial purposes, in whole or in part, is not permitted unless authorised by Volkswagen AG. Volkswagen AG does not guarantee or accept any liability with respect to the correctness of information in this document. Copyright by Volkswagen AG.
satelettronica

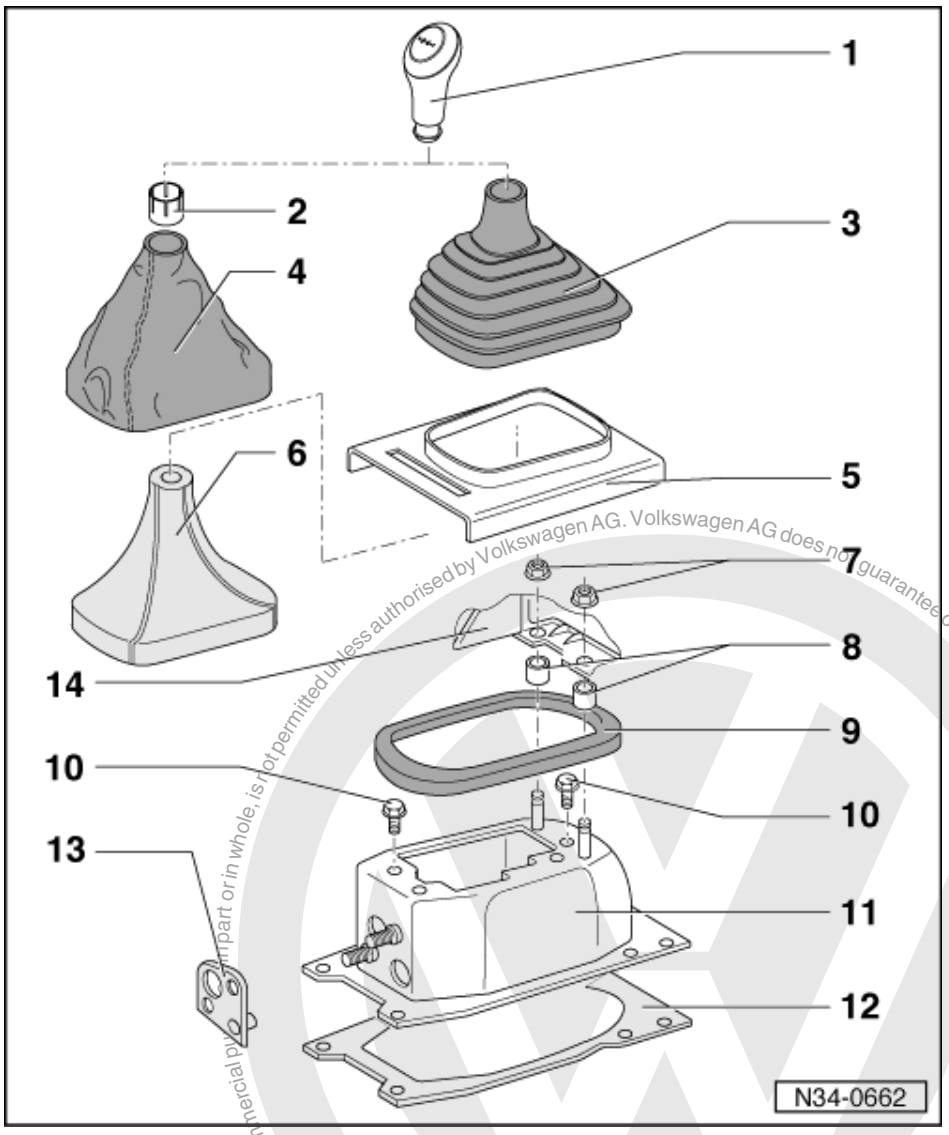

7 Plastic nut
- Console to gear stick housing
- Remove before removing gear selector mechanism

8 Spacer sleeve
- Between console and gear stick housing

9 Gasket
- Between selector housing and floor
- Self-adhesive
- Bond to gear stick housing

10 Hexagon bolt, 15 Nm
- For mounting plate to gear stick housing

11 Selector housing

Protected by copyright. Copying for private or commercial purposes, in part or in whole, is not permitted unless authorised by Volkswagen AG. Volkswagen AG does not guarantee or accept any liability with respect to the correctness of information in this document. Copyright by Volkswagen AG.
satelettronica

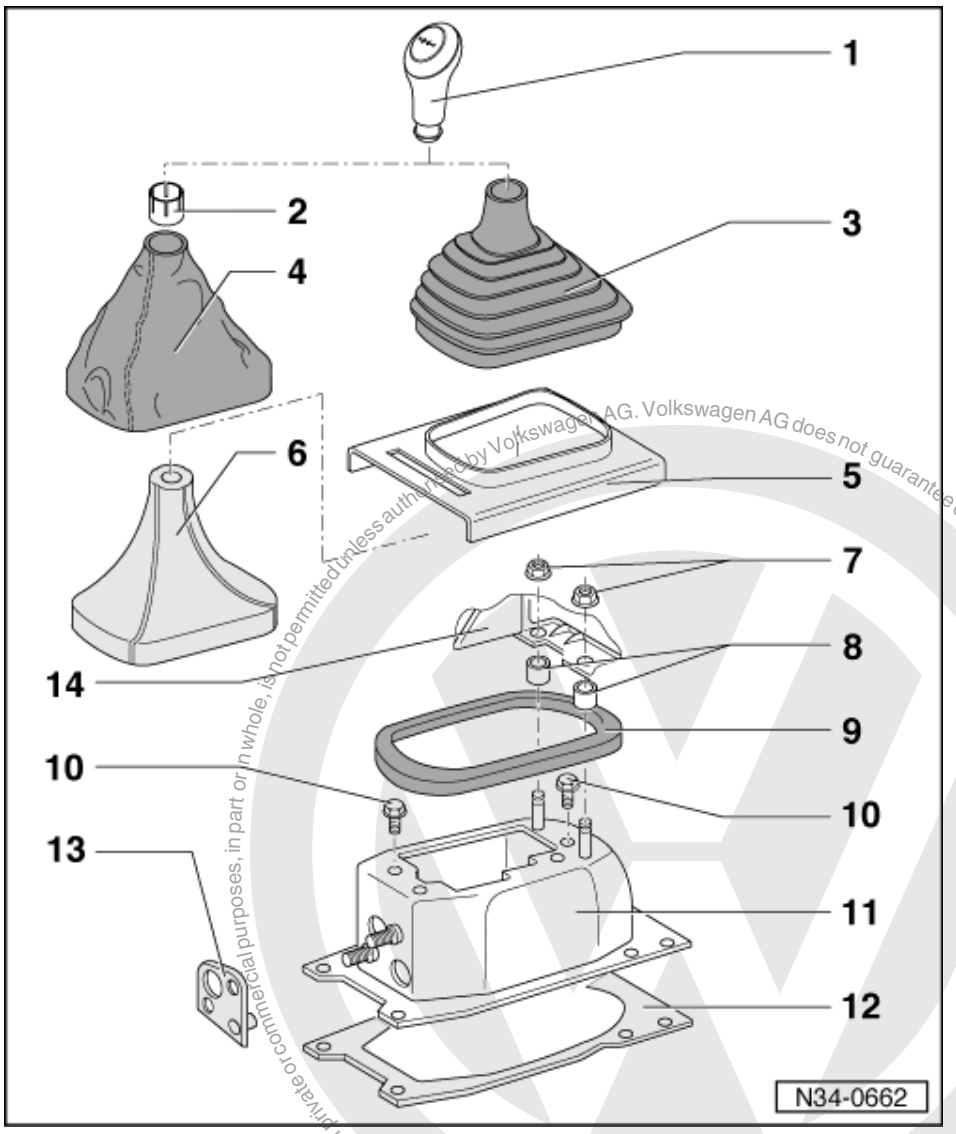

12 Gasket
- Self-adhesive
- Bond underneath gear stick housing

13 Gasket
- Between selector cables and gear stick housing

14 Central console

Protected by copyright. Copying for private or commercial purposes, in part or in whole, is not permitted unless authorised by Volkswagen AG. Volkswagen AG does not guarantee or accept any liability with respect to the correctness of information in this document. Copyright by Volkswagen AG.
satelettronica

1.5 - Installing gear stick gaiter to gear stick knob

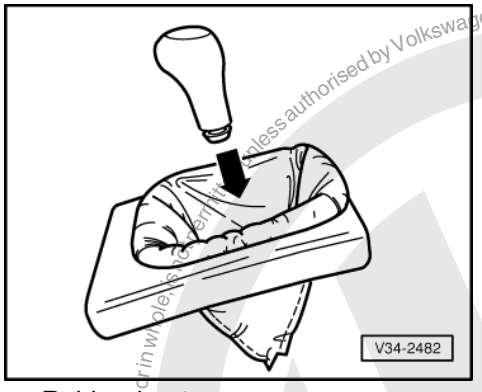

◆ Rubber boot

- Engage with gear stick knob

◆ Leatherette gaiter

- Turn cover inside out.
- -> Insert gear stick knob in gaiter (arrow).

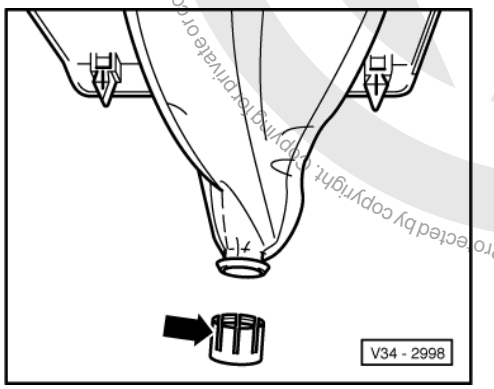

- -> Secure gaiter on gear stick knob with sleeve (arrow).
- Install gear stick knob and gaiter together.

Protected by copyright. Copying for private or commercial purposes, in part or in whole, is not permitted unless authorised by Volkswagen AG. Volkswagen AG does not guarantee or accept any liability with respect to the correctness of information in this document. Copyright by Volkswagen AG.
satelettronica

1.6 - Removing and installing gear stick

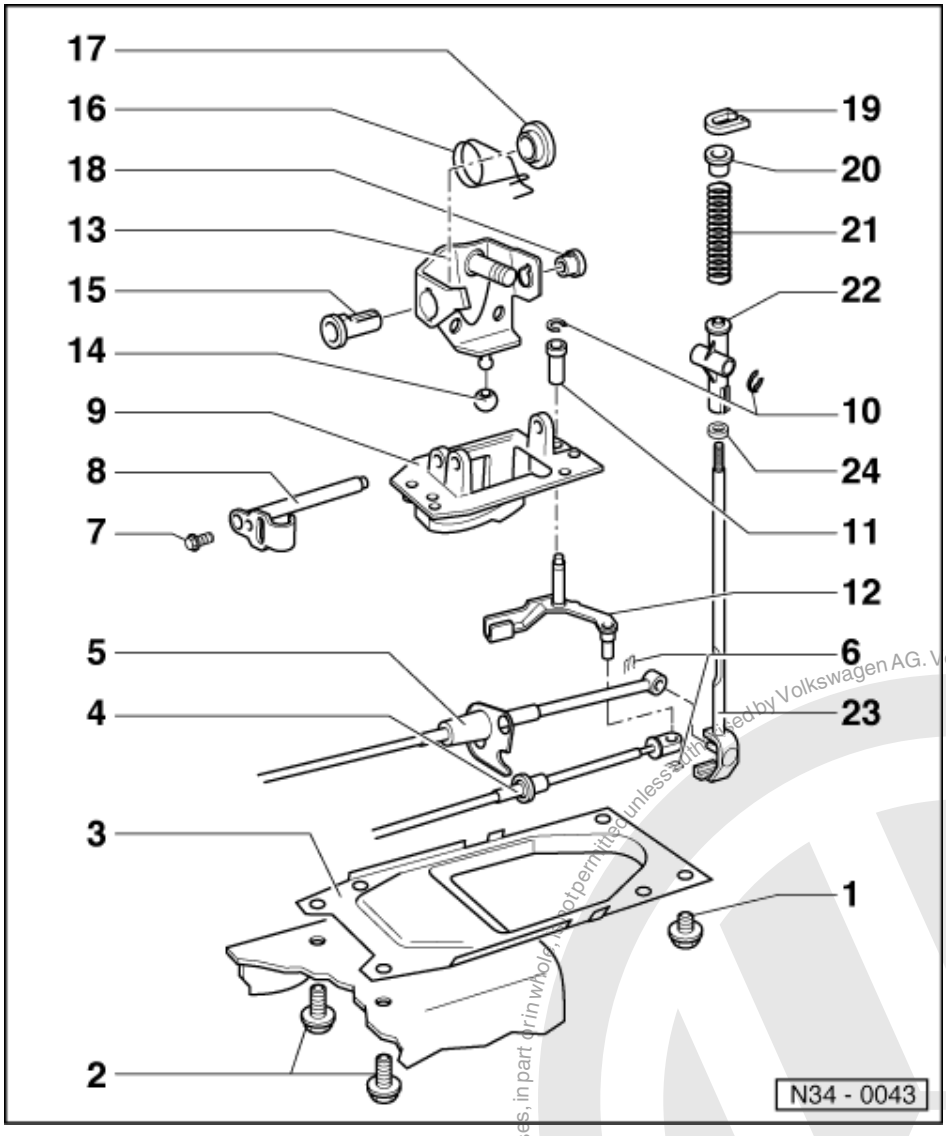

Note:

Lubricate all mountings and sliding surfaces with Polyurea grease Part No. G 052 142 A2.

1 Hexagon bolt, 25 Nm
- For gear stick housing to body

2 Hexagon bolt, 25 Nm
- For gear stick housing to body

3 Cover plate

4 Gate selector cable
- On gate selector bracket

5 Gear selector cable
- On gear lever

6 Spring clip

7 Hexagon bolt, 15 Nm
- For fulcrum pin to mounting plate

8 Fulcrum pin

Protected by copyright. Copying for private or commercial purposes, in part or in whole, is not permitted unless authorised by Volkswagen AG. Volkswagen AG does not guarantee or accept any liability with respect to the correctness of information in this document. Copyright by Volkswagen AG.
satelettronica

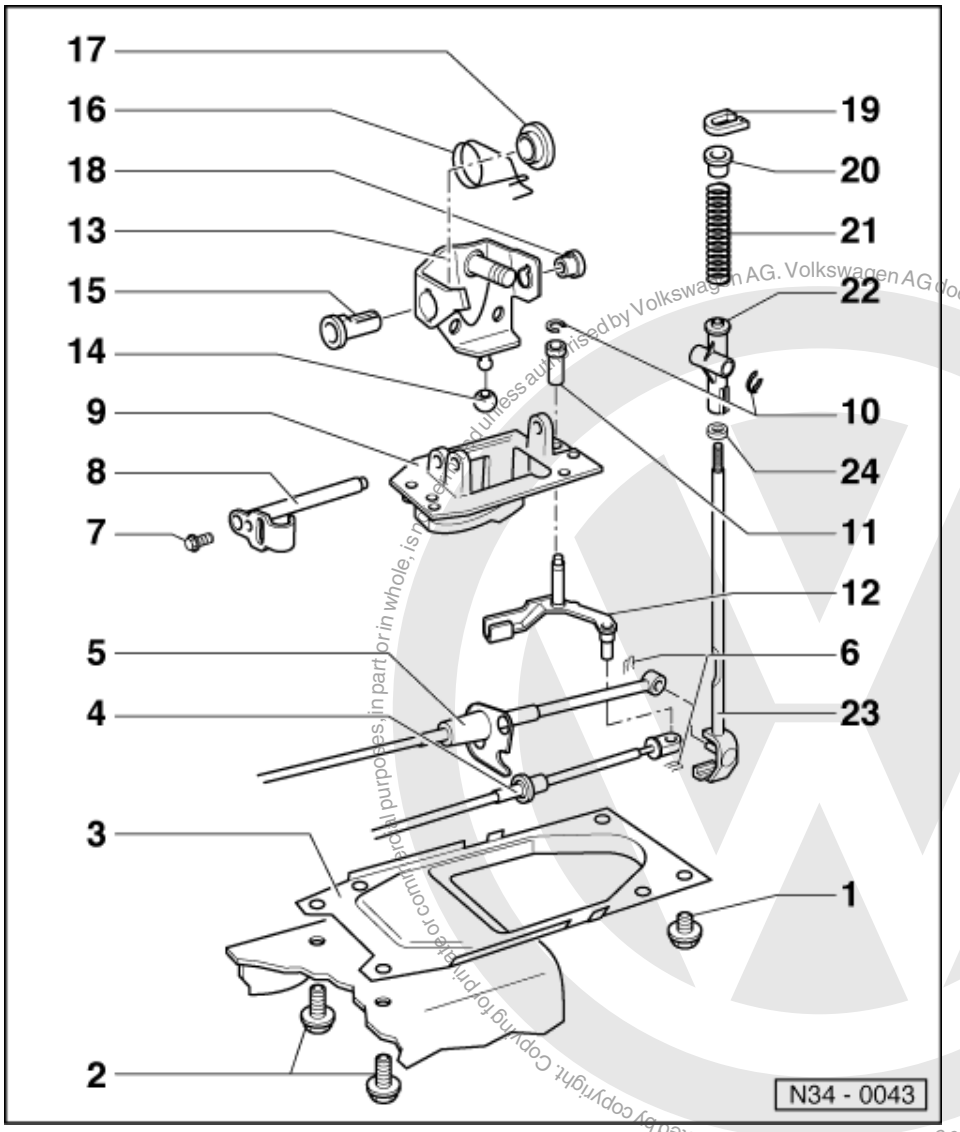

9 Mounting plate
10 Lock washer
- Removing => Fig. 3

11 Bush
- Only fits in one position

12 Gate selector bracket
13 Gate selector housing
- Fit into mounting plate after fitting the complete gear stick

14 Cap
- Fitting => Fig. 1

15 Bush
16 Spring
17 Guide bush
- Locate on bush (item 15)

18 Bush

Protected by copyright. Copying for private or commercial purposes, in part or in whole, is not permitted unless authorised by Volkswagen AG. Volkswagen AG does not guarantee or accept any liability with respect to the correctness of information in this document. Copyright by Volkswagen AG.
satelettronica

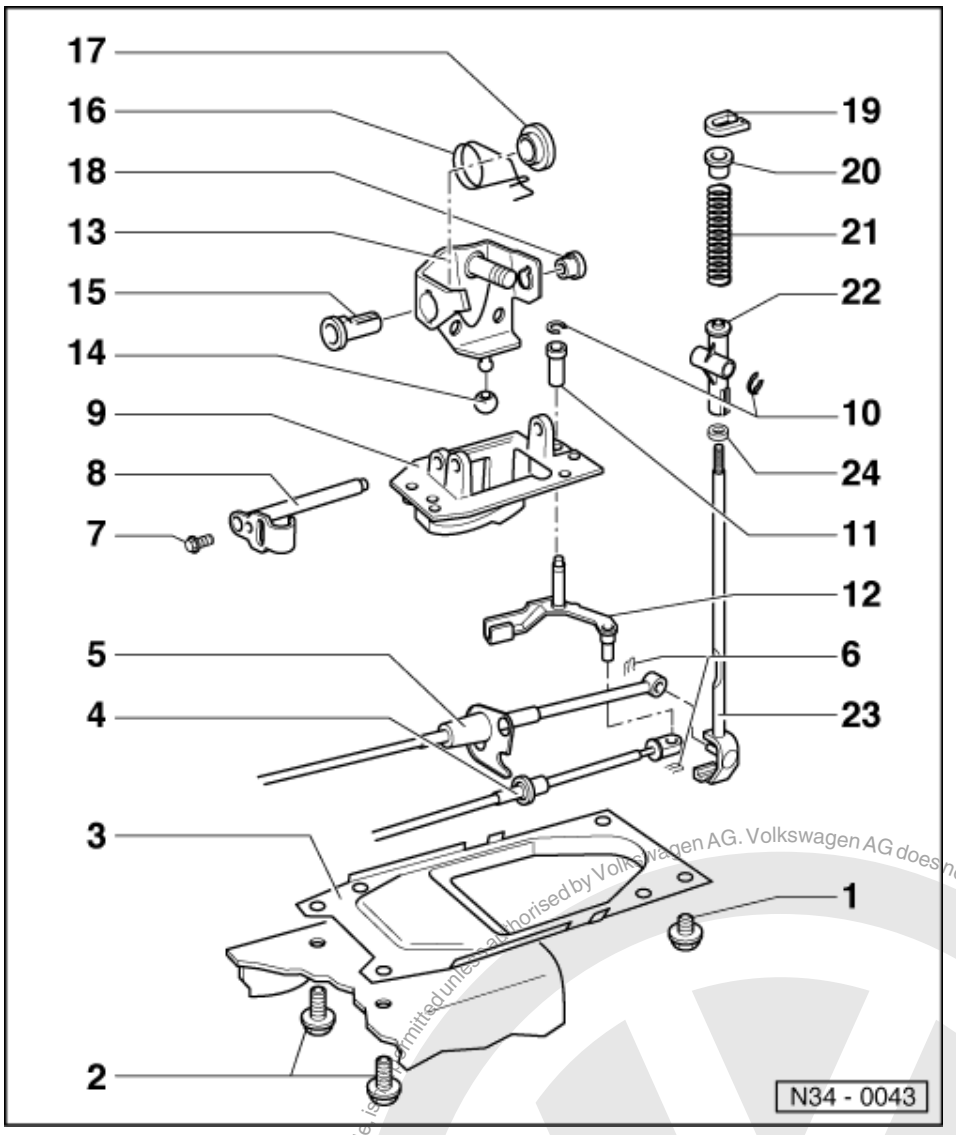

19 Circlip
- Removing and installing =>Fig. 2

20 Spacer sleeve
21 Spring
22 Gear stick guide
23 Gearbox selector lever
24 Damping washer

Protected by copyright. Copying for private or commercial purposes, in part or in whole is not permitted unless authorised by Volkswagen AG. Volkswagen AG does not guarantee or accept any liability with respect to the correctness of information in this document. Copyright by Volkswagen AG.
satelettronica

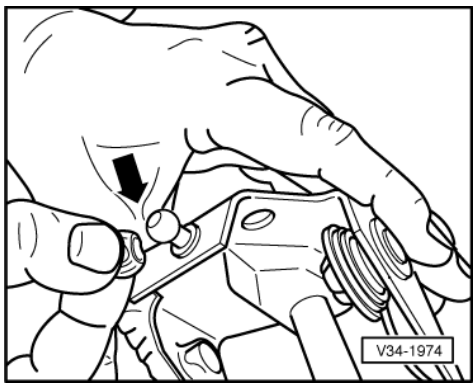

-> Fig.1 Fitting cap

- Press on from side (arrow 1).
- Press opening together to form a slot.

Note:

If necessary heat cap (e.g. hot water).

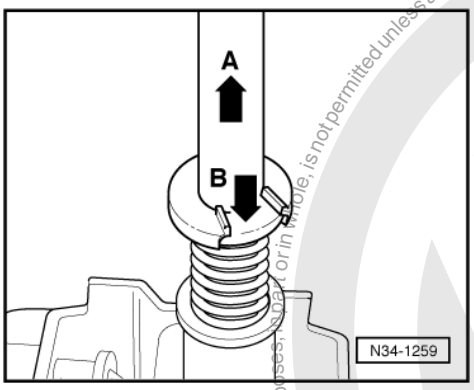

-> Fig.2 Removing and installing circlip

- To remove and install the circlip pull gear stick in arrow direction -A- and at the same time push down spacer bush onto stop with a screwdriver in arrow direction -B-.

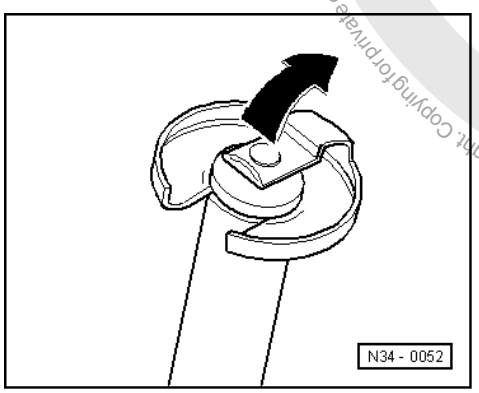

-> Fig.3 Removing lock plate for gate selector bracket and gear stick guide/gate selector housing

- Lift tab in direction of arrow.

Protected by copyright. Copying for private or commercial purposes, in part or in whole, is not permitted unless authorised by Volkswagen AG. Volkswagen AG does not guarantee or accept any liability with respect to the correctness of information in this document. Copyright by Volkswagen AG.
satelettronica

1.7 - Adjusting gear selector mechanism up to 09.99

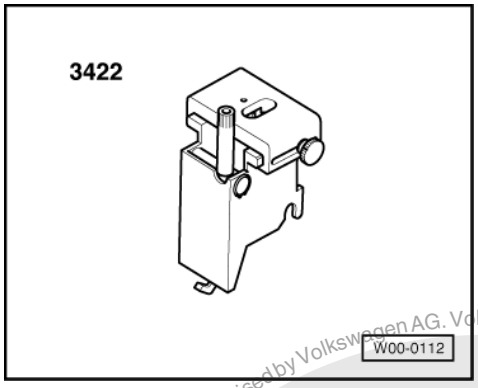

Special tools and workshop equipment required

- 3192 Gear lever gauge

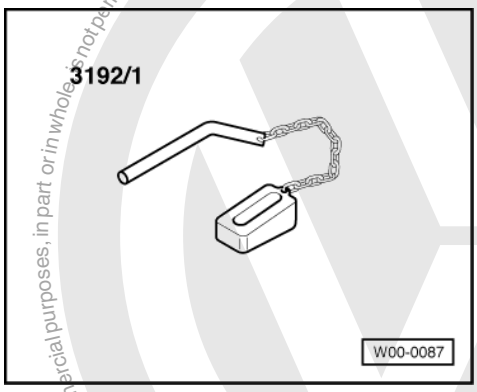

- 3192/1 Wedge

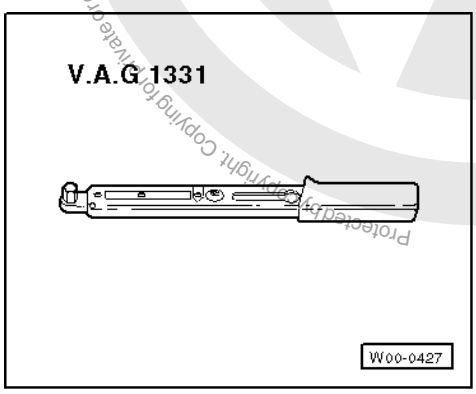

Special tools and workshop equipment required

- V.A.G 1331 Torque wrench

Notes:

The following are prerequisites for correct gear linkage adjustment:

- Perfect gear linkage operating and transfer elements.
- Mounting of gear and gate selector cables to all operating elements OK (not worn).
- Gear and gate selector cables move smoothly.

Protected by copyright. Copying for private or commercial purposes, in part or in whole, is not permitted unless authorised by Volkswagen AG. Volkswagen AG does not guarantee or accept any liability with respect to the correctness of information in this document. Copyright by Volkswagen AG.
satelettronica

Gearbox, clutch and clutch release mechanism must also be in good condition.

Gearbox in neutral.

- Remove gear stick knob and gaiter => Page 59

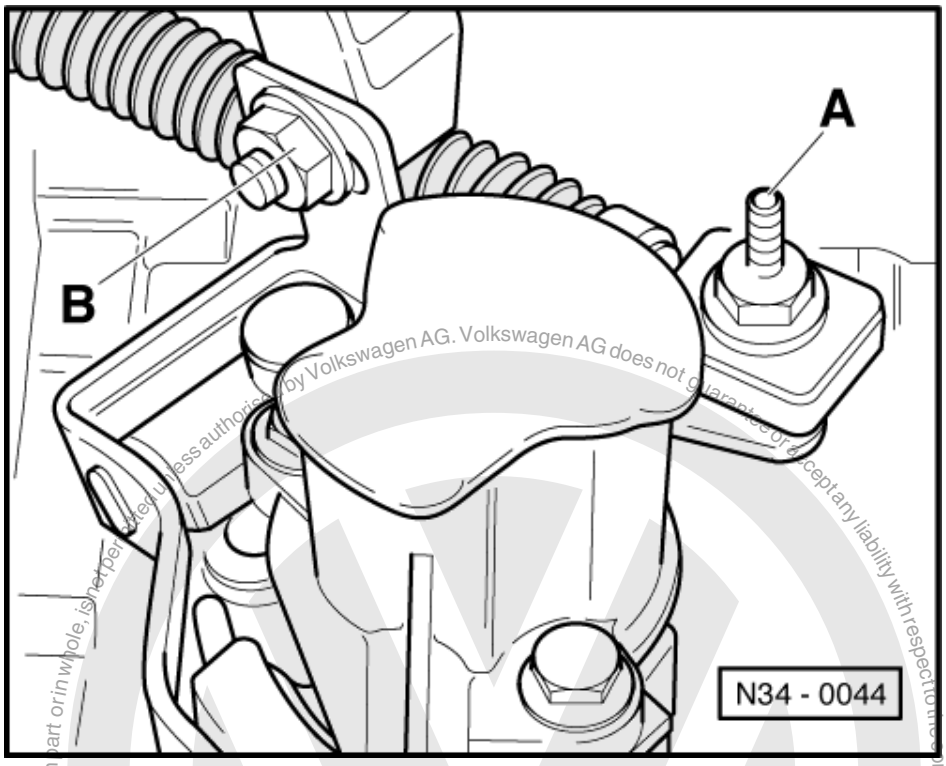

- Remove balance weight => Page 42 .
- -> Loosen bolt -A- and nut -B-, until the gear selector cable and actuating arm/gate selector cable are free to move in the elongated holes.

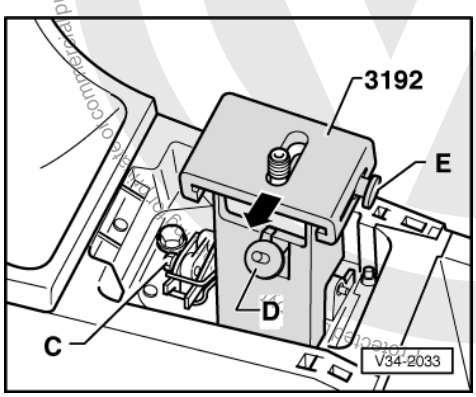

- -> Loosen bolt -C-, pull off foam seal in area of bolt -C- if necessary.
- Insert gear stick jig.
- Swing jig securing hook under mounting plate and tighten nut -D-.
- Press gear stick into left-hand detent of sliding piece.
- Press gear stick together with sliding piece to left onto stop (direction of arrow) and tighten sliding piece with bolt -E-.

satelettronica

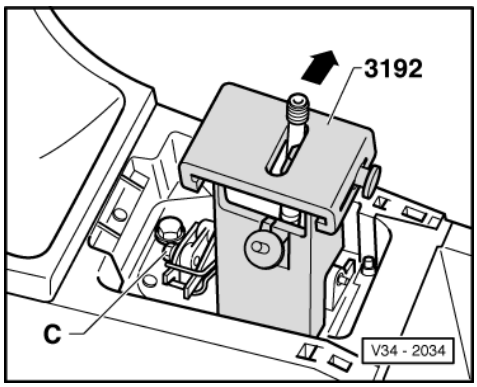

- -> Press gear stick into the right-hand detent (direction of arrow).
- Tighten bolt -C-.

- Insert wedge and pin.

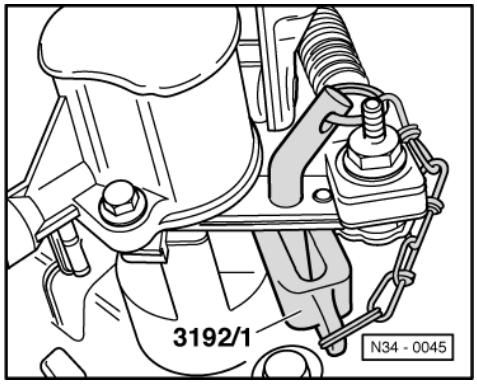

- -> Slide wedge between gear selector lever and selector cover plate, ensuring no play.

Note:

Wedge must not lift gear stick.

- In this position secure gear selector cable and actuating arm/gate selector cable, when doing this, check position of wedge.
- Remove gear stick jig.
- Fit gear stick knob and gaiter =>Page 59 .

Functional check

- The gearstick must rest in the 3rd/4th gear plane with gearbox in neutral.

- Operate clutch.
- Select all gears several times. Pay particular attention to the operation of the reverse gear lock.

Should a gear fail to engage smoothly after repeated selection, the selector shaft play (lift) should be checked as follows:

- Engage 1st gear.

Protected by copyright. Copying for private or commercial purposes, in part or in whole, is not permitted unless authorised by Volkswagen AG. Volkswagen AG does not guarantee or accept any liability with respect to the correctness of information in this document. Copyright by Volkswagen AG.

satelettronica

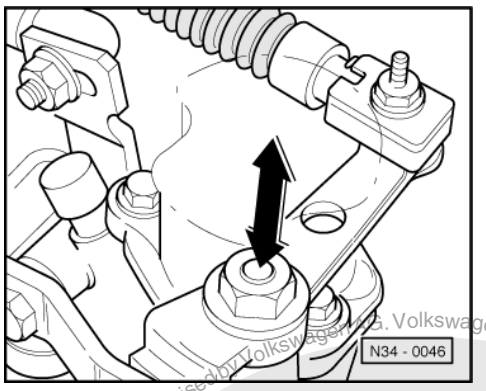

- Press gear stick to left onto stop and release.
- At the same time observe selector shaft in gear box (2nd mechanic).
- -> When moving the gear stick the selector shaft must move approx. 1 mm (in direction of arrow).

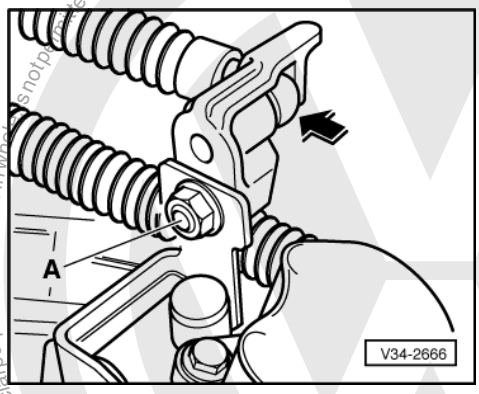

-> Should this not be the case, disengage first gear and again loosen nut -A- for the actuating arm/gate selector cable mounting. (The gate selector cable has a certain amount of play at the mounting - due to the transfer elements).
- Take up gate selector cable play, by lightly pressing the mounting towards the bulkhead (direction of arrow).
- Tighten nut -A- in this position.

Protected by copyright. Copyright by Volkswagen AG.
Copyright by Volkswagen AG. Volkswagen AG does not guarantee or accept any liability with respect to the correctness of information in this document.
satelettronica

2 - Servicing gear selector mechanism from 10.99

2.1 - Servicing gear selector mechanism from 10.99

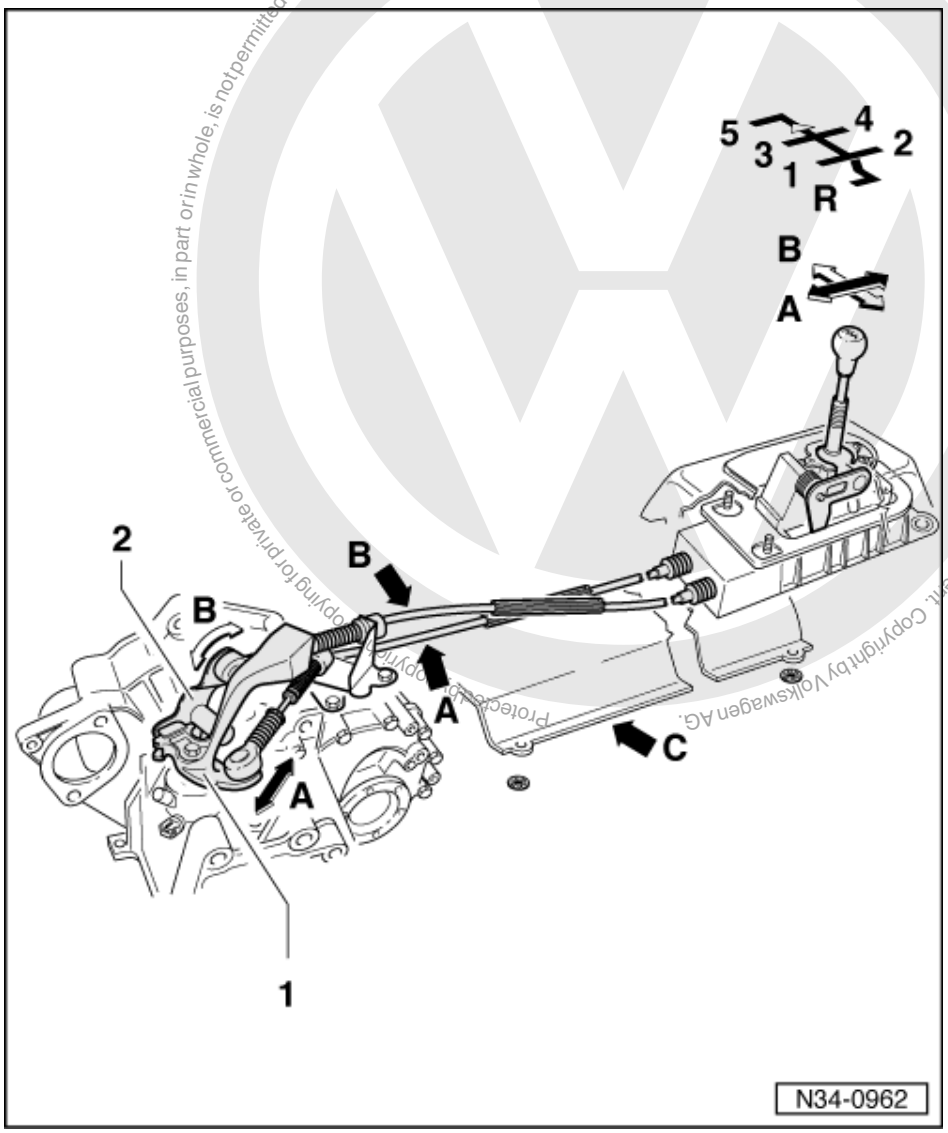

2.2 - Installation position of gear selector mechanism

A - Gear change cable
B - Gate selector cable
C - Heat shield

- Remove before removing the gear selector mechanism.

Arrow -A- Gear selection movement

Arrow -B- Gate selection movement

1 Gear selector lever
2 Relay lever

satelettronica

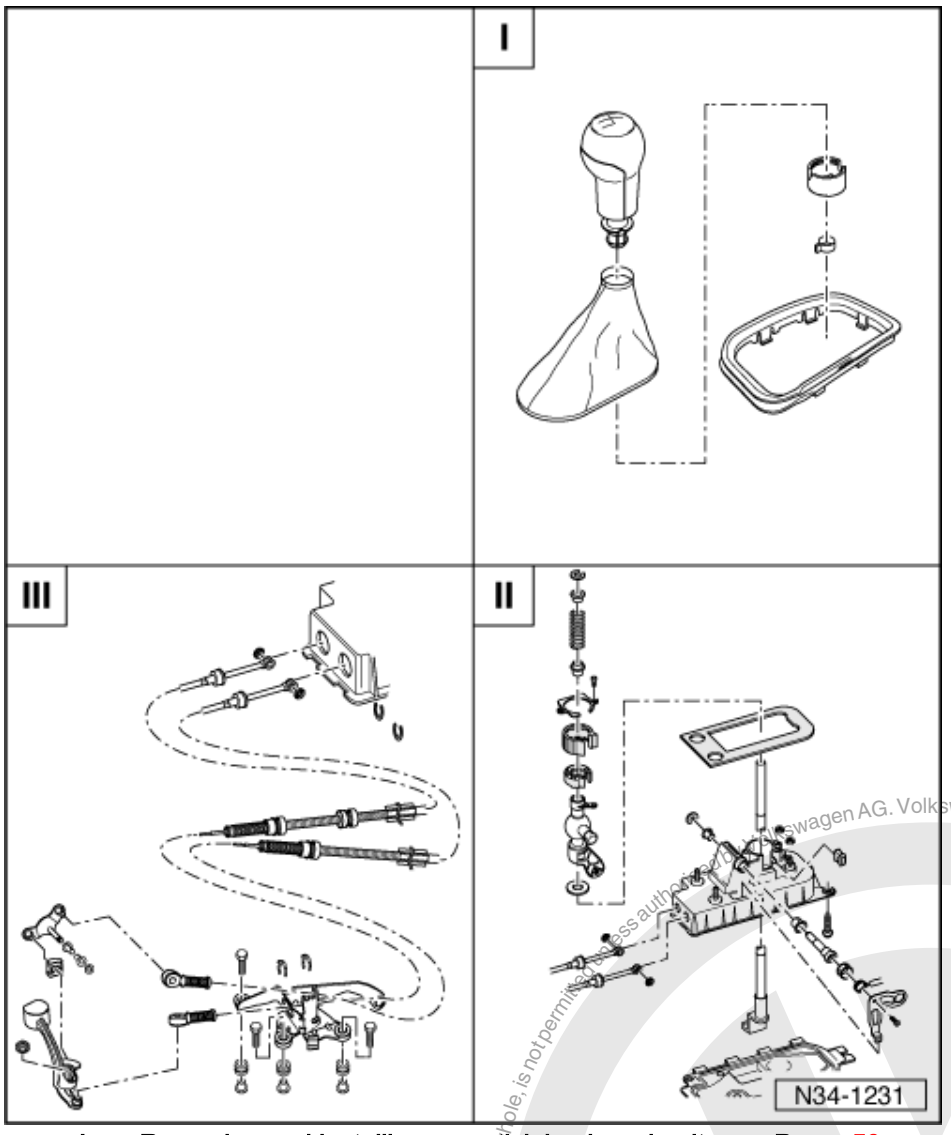

I - Removing and installing gearstick knob and gaiter => Page 59
II - Servicing gear stick and gear stick housing => Page 61
III - Assembly overview: Removing and installing operating cables => Page 65

Removing and installing selector mechanism => Page 68

Adjusting gear selector mechanism from 10.99 => Page 70

Notes:

- Before working on the selector mechanism, disconnect earth strap from the battery in the engine compartment.
- Note radio code on vehicles with coded radio.
- To replace the selector cables remove gear selector mechanism complete.
- Do not kink selector cables.

Protected by copyright. Copying for private or commercial purposes, in part or in whole, is not permitted unless authorised by Volkswagen AG. Volkswagen AG does not guarantee or accept any liability with respect to the correctness of information in this document. Copyright by Volkswagen AG.
Satelettronica

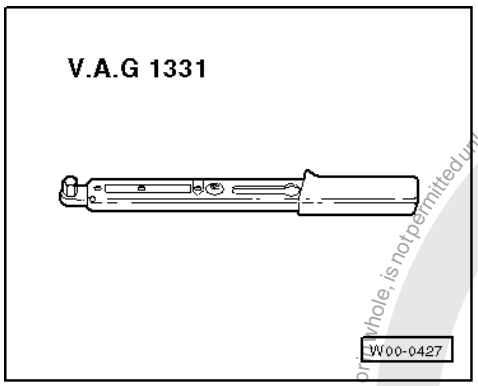

Special tools and workshop equipment required

- V.A.G 1331 Torque wrench

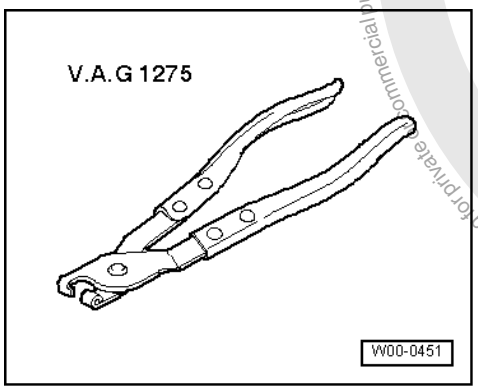

- V.A.G 1275 Pliers

Protected by copyright. Copying for private or commercial purposes, part or whole, is not permitted unless authorised by Volkswagen AG. Volkswagen AG does not guarantee or accept any liability with respect to the correctness of information in this document. Copyright by Volkswagen AG.
satelettronica

2.3 - Removing and installing selector lever knob and gaiter

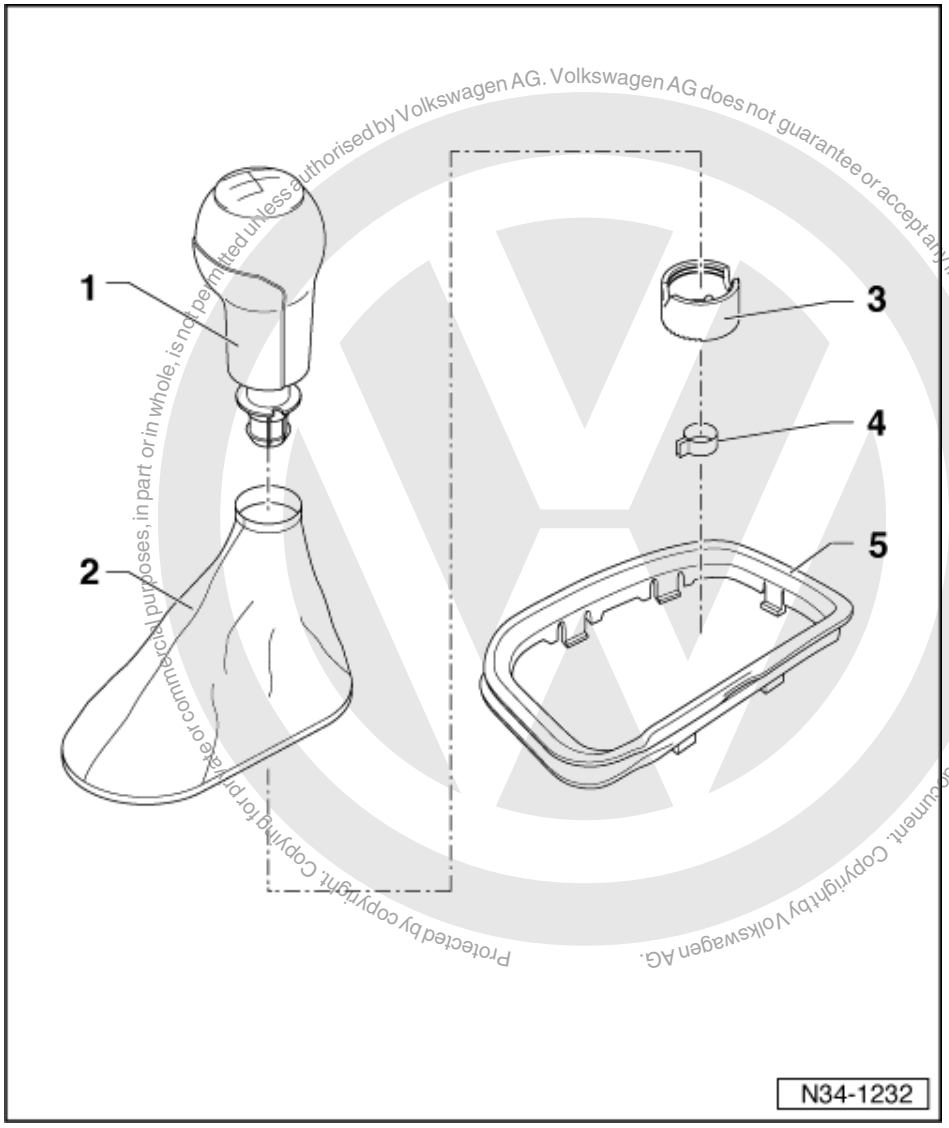

Protected by copyright. Copying for private or commercial purposes, in part or in whole, is not permitted unless authorised by Volkswagen AG. Volkswagen AG does not guarantee or accept any liability with respect to the correctness of information in this document. Copyright by Volkswagen AG.

1 Selector lever knob
- Screw on and off together with gaiter

2 Cover
- Separating from gear stick knob => Fig. 1
- Connect to gear stick knob before installing Fig. 1
- Remove and install together with gear stick knob

3 Sleeve

4 Clamp
- To secure gear stick knob on gear stick

5 Frame

satelettronica

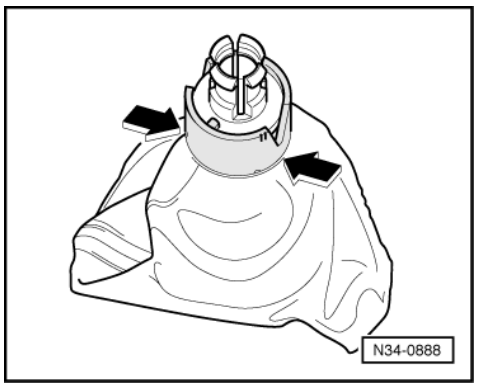

-> Fig.1 Separating cover from gear stick knob and assembling to gear stick knob

- Turn cover inside out.
- Carefully lever clamping sleeve (arrow) off with a screwdriver and pull the gear stick knob out.

Installation is carried out in the reverse sequence, when doing this note the following:

- Insert gear stick knob in cover.
- Push clamping sleeve onto gear stick knob and engage.
- Install gear stick knob and gaiter together.

satelettronica

Protected by copyright. Copying for private or commercial purposes, in part or in whole, is not permitted unless authorised by Volkswagen AG. Volkswagen AG does not guarantee or accept any liability with respect to the correctness of information in this document. Copyright by Volkswagen AG.

2.4 - Servicing gear stick and gear stick housing

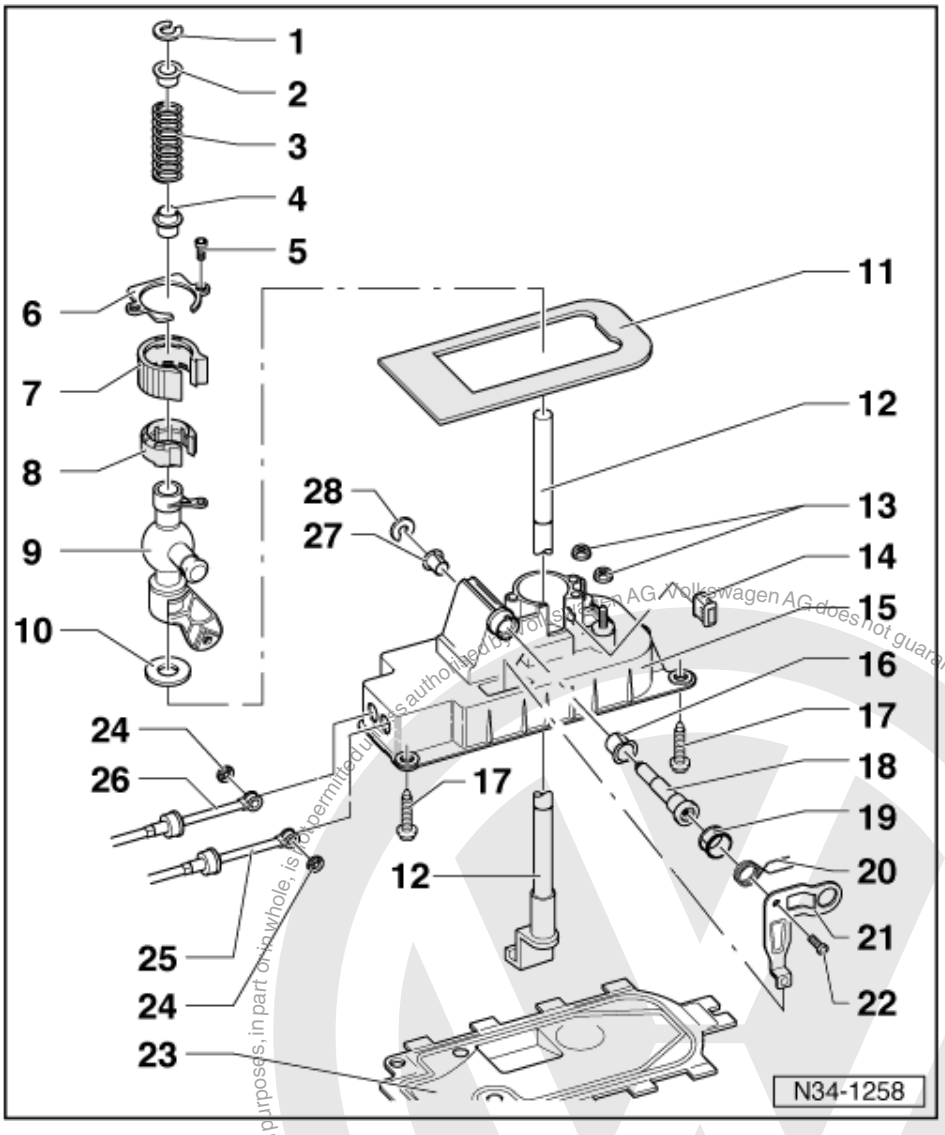

Note:

Lubricate all mountings and sliding surfaces with Polyurea grease Part No. G 052 142 A2.

1 Circlip
- Removing and installing =>Fig. 1

2 Bush
3 Spring
4 Bush
5 Torx screw, 5 Nm
6 Cover plate
7 Damper
8 Bearing shell
9 Gear stick guide

Protected by copyright. Copying for private or commercial purposes, in part or in whole, is not permitted unless authorised by Volkswagen AG. Volkswagen AG does not guarantee or accept any liability with respect to the correctness of information in this document. Copyright by Volkswagen AG.
satelettronica

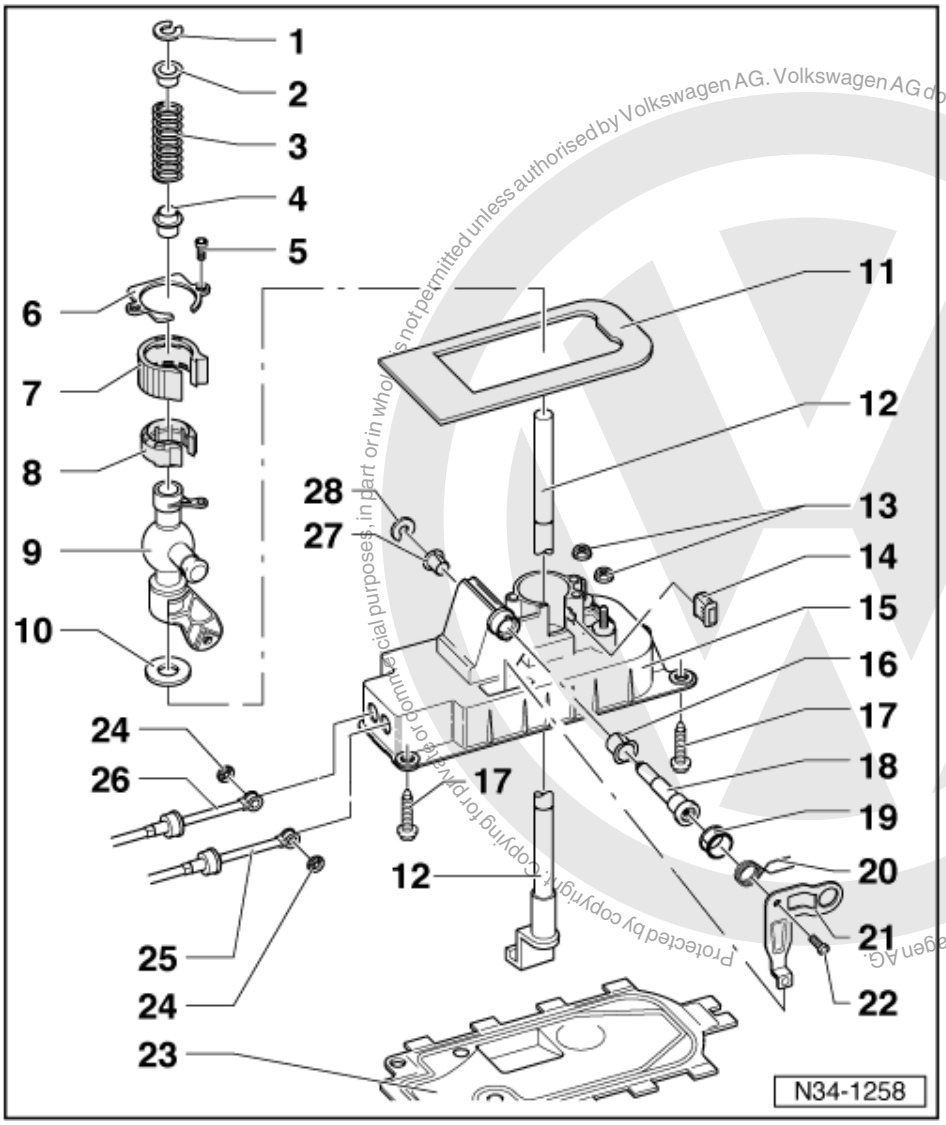

10 Damping washer
11 Gasket
- Between selector housing and floor
- Self-adhesive
- Bond to gear stick housing

12 Gearbox selector lever
13 Plastic nut
- For console on gear stick housing

14 Damper
15 Selector housing
16 Bush
17 Bolt, 25 Nm
18 Fulcrum pin
19 Guide bush
20 Spring
- Installing => Fig. 2

Protected by copyright. Copying for private or commercial purposes, in part or in whole, is not permitted unless authorised by Volkswagen AG. Volkswagen AG does not guarantee or accept any liability with respect to the correctness of information in this document. Copyright by Volkswagen AG.
satelettronica

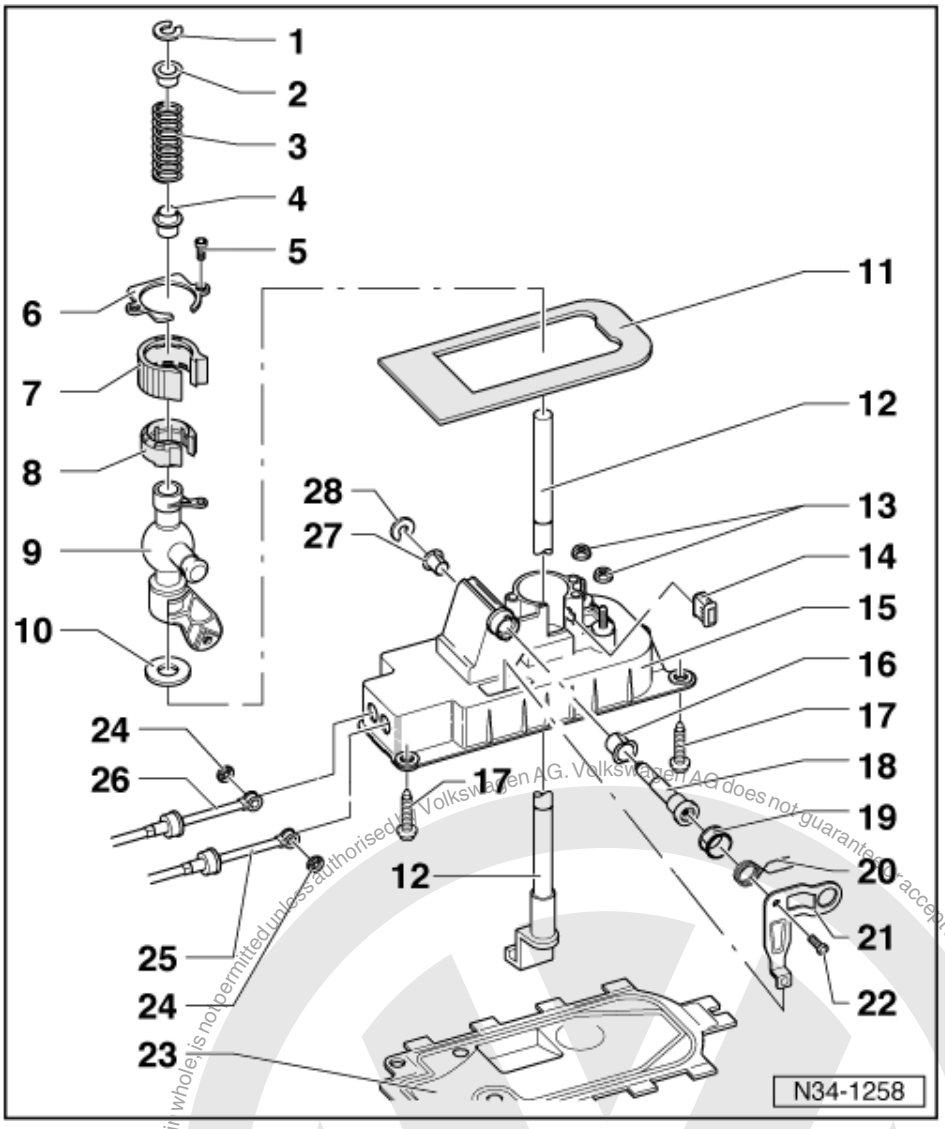

21 Gate selector bracket
22 Torx screw, 5 Nm
23 Base plate
- Open tabs to remove
- Renew

24 Lock washer
25 Gate selector cable
- On gate selector bracket
- Installation position => Page 56

26 Gear selector cable
- Press onto gear stick guide
- Installation position => Page 56

27 Bush
- Only fits in one position

28 Lock washer

Protected by copyright. Copying for private or commercial purposes, in part or in whole, is not permitted unless authorised by Volkswagen AG. Volkswagen AG does not guarantee or accept any liability with respect to the correctness of information in this document. Copyright by Volkswagen AG.
satelettronica

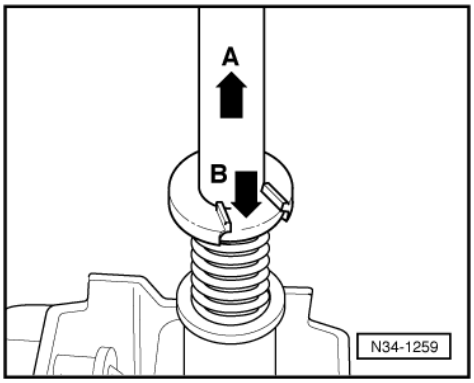

-> Fig.1 Removing and installing circlip

- To remove and install the circlip pull gear stick in arrow direction -A- and at the same time push down spacer bush onto stop with a screwdriver in arrow direction -B-.

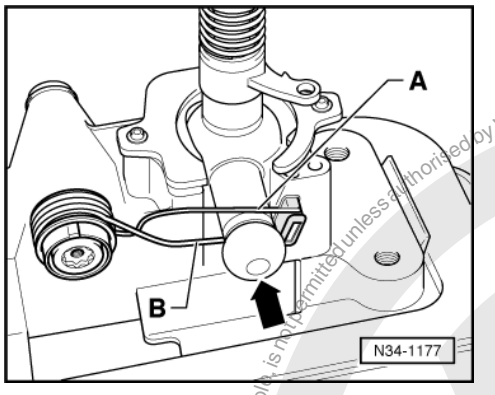

-> Fig.2 Installing spring

- Insert spring so that the spring extension -A- lies above pin (arrow).
- Then pull spring extension -B- down so that it reaches below pin (arrow).

Protected by copyright. Copying for private or commercial purposes, in part or in whole, is not permitted unless authorised by Volkswagen AG. Volkswagen AG does not guarantee or accept any liability with respect to the correctness of information in this document. Copyright by Volkswagen AG.
satelettronica

2.5 - Assembly overview - Removing and installing selector cables

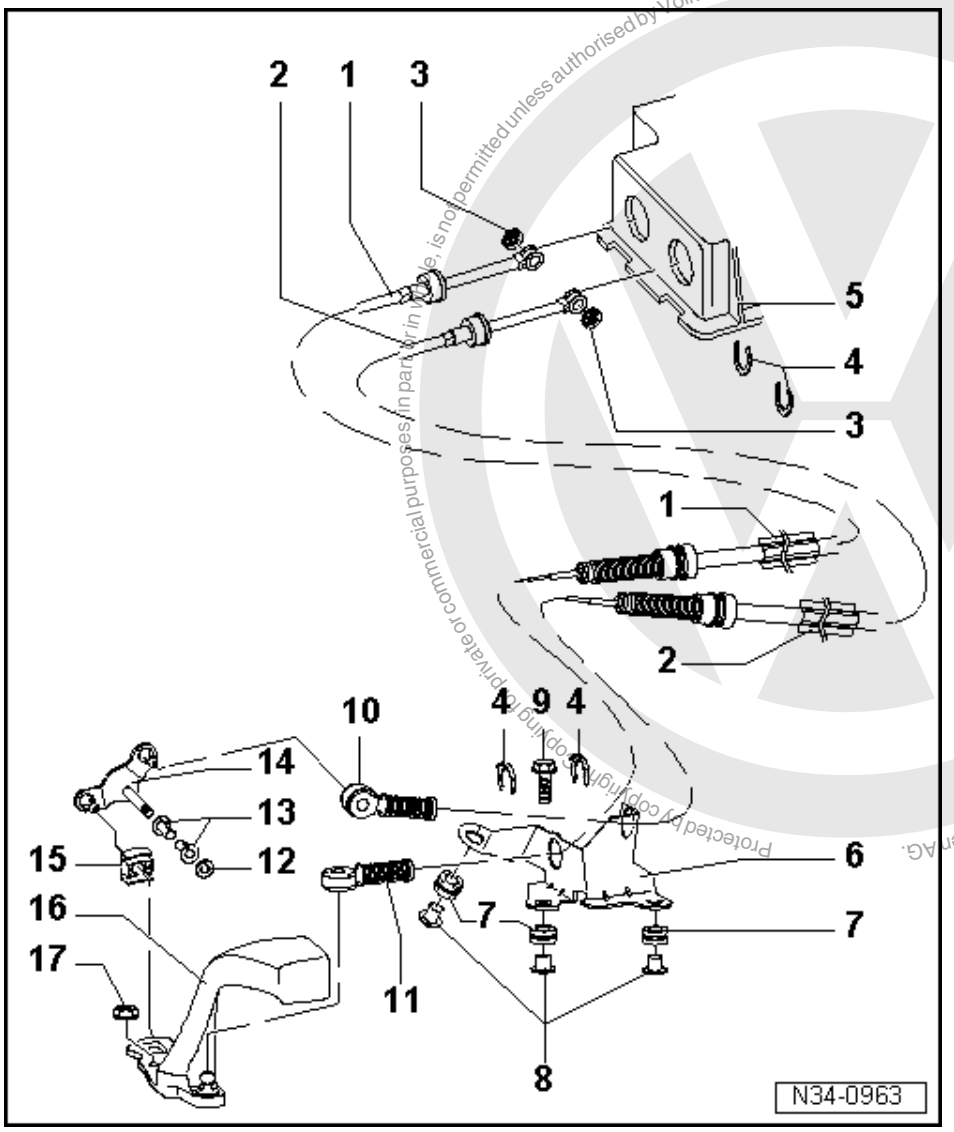

Volkswagen AG. Volkswagen AG does not guarantee or accept any liability with respect to the correctness of information in this document. Copyright by Volkswagen AG. Protected by copyright. Copying for private or commercial purposes, in part or in whole, is not permitted unless authorised by Volkswagen AG.
satelettronica

Note:

Lubricate all mountings and sliding surfaces with Polyurea grease Part No. G 052 142 A2.

1 Gear selector cable
- Press onto gear stick guide
- Installation position => Page 56

2 Gate selector cable
- On gate selector bracket
- Installation position => Page 56

3 Circlip

4 Circlip
- Do not damage cable when removing

5 Selector housing

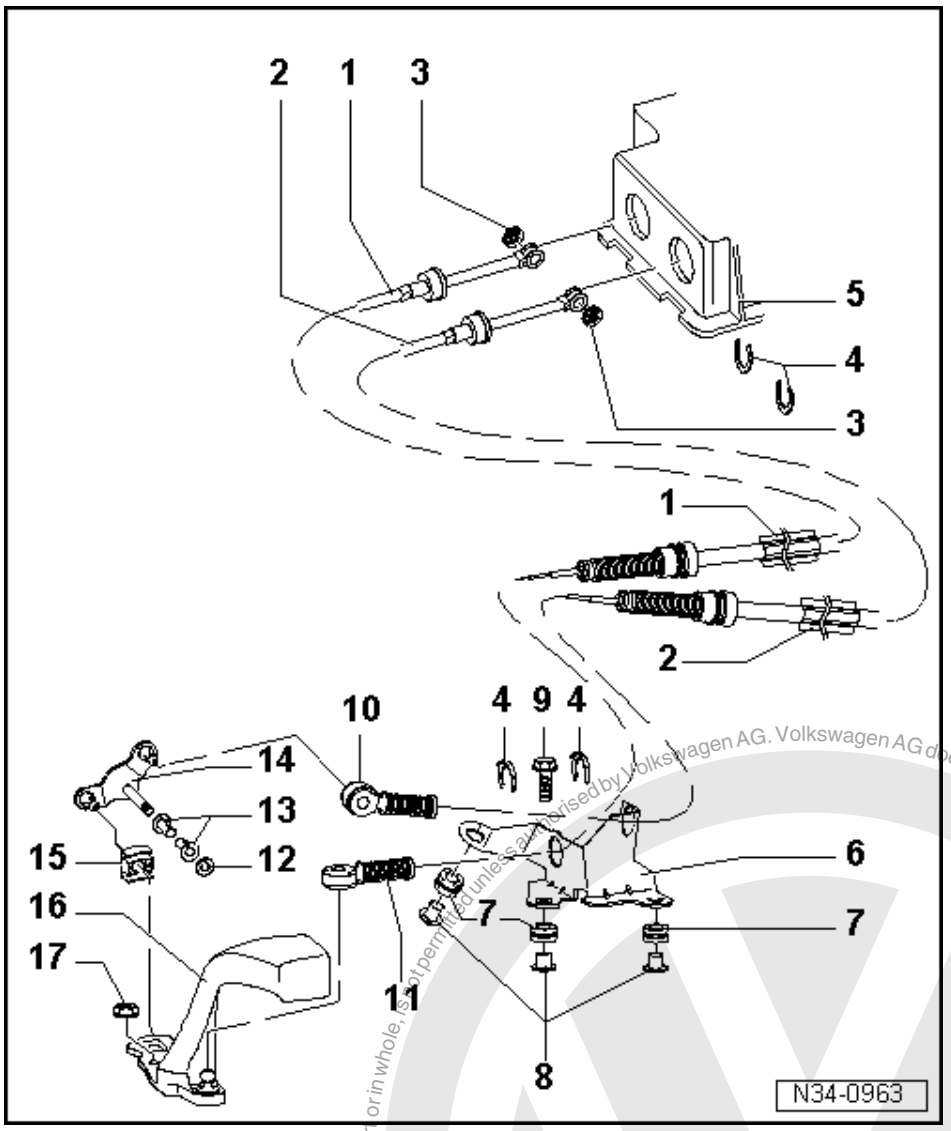

6 Support bracket
7 Bush
- Support bracket mounting to gearbox

8 Distance piece
9 Hexagon bolt, 25 Nm
- For support bracket

10 Cable locking mechanism
- For gate selector cable to relay lever

11 Cable locking mechanism
- For gear selector cable to gear change lever

12 Circlip
13 Bush
14 Relay lever
- Installation position => Page 68

Protected by copyright. Copying for private or commercial purposes, in part or in whole, is not permitted unless authorised by Volkswagen AG. Volkswagen AG does not guarantee or accept any liability with respect to the correctness of information in this document. Copyright by Volkswagen AG.
satelettronica

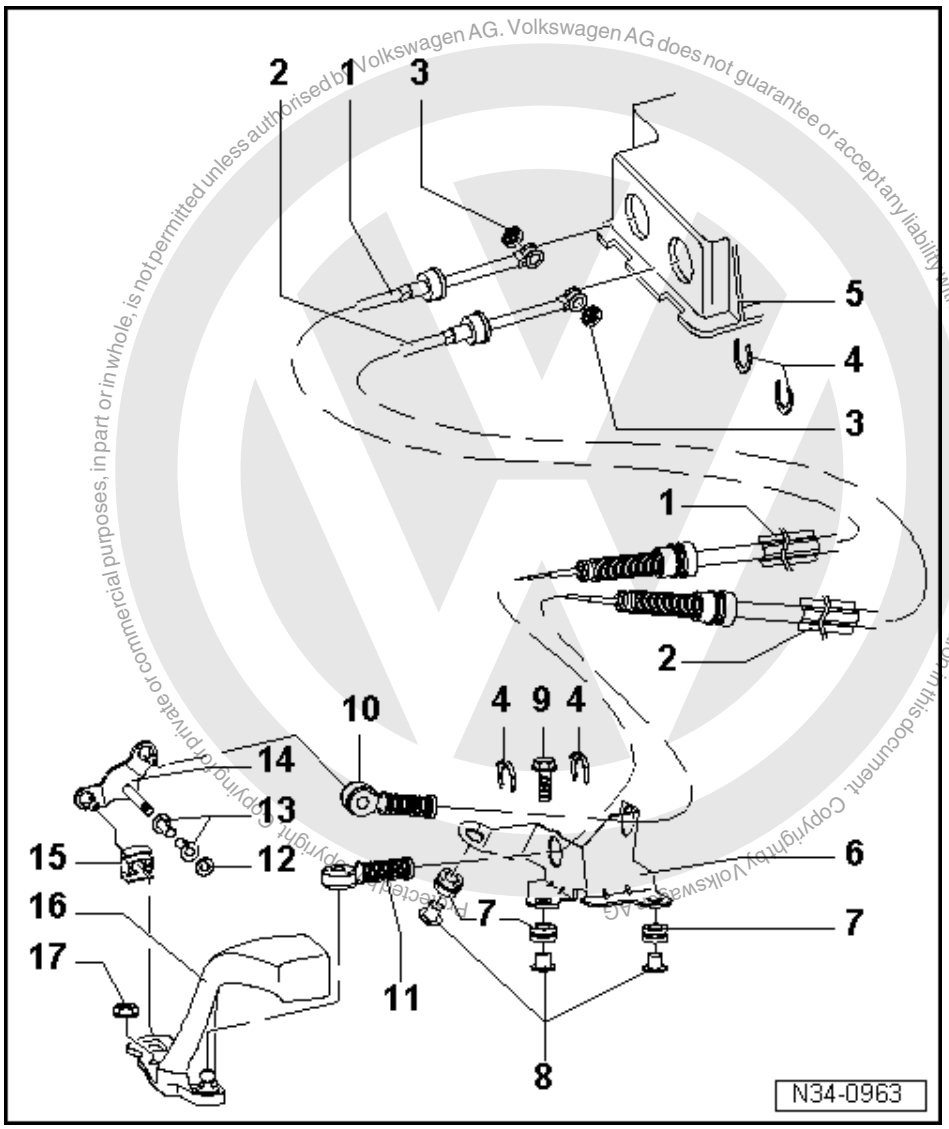

Volkswagen AG. Volkswagen AG does not guarantee or accept any liability with respect to the correctness of information in this document. Copyright by Volkswagen AG. Protected by copyright. Copying for private or commercial purposes, in part or in whole, is not permitted unless authorised by Volkswagen AG.

15 Shoe

16 Gearbox selector lever

- With balance weight
- Install so that the master spline aligns with selector shaft
- After installing adjust gear selector mechanism => Page 70
- Installation position => Page 68

17 Hexagon nut, 25 Nm

satelettronica

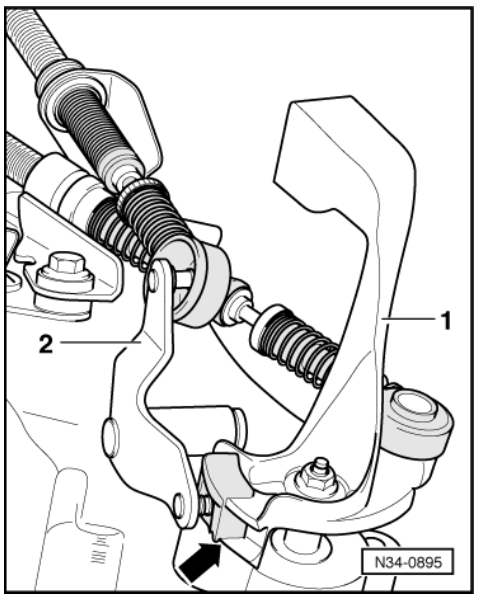

-> Installation position of gearbox selector lever/relay lever

1 - Gear selector lever
With balance weight
2 - Relay lever
Locates in guide rail of gear selector lever via shoe (arrow)

2.6 - Removing and installing selector mechanism

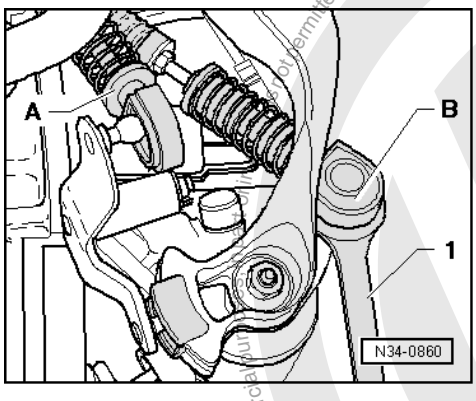

Removing

- -> Lever gate selector cable -A- and gear selector cable -B- off gearbox using an open jaw spanner.

1 = 13 mm open jaw spanner, commercially available

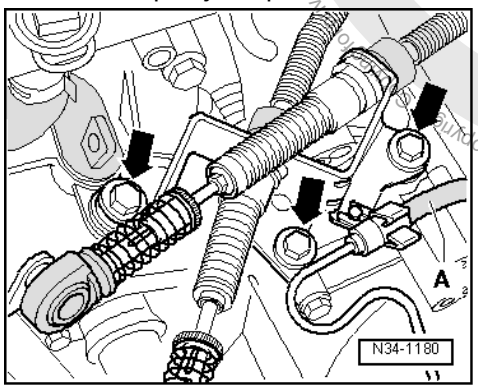

Protected by copyright. Copying for commercial purposes, distribution, display or making available to the public not permitted unless authorised by Volkswagen AG. Volkswagen AG does not guarantee or accept any liability with respect to the correctness of information in this document. Copyright by Volkswagen AG.
satelettronica

- -> Unclip hose -A- from cable support bracket.
- Remove cable support bracket from gearbox (arrows).

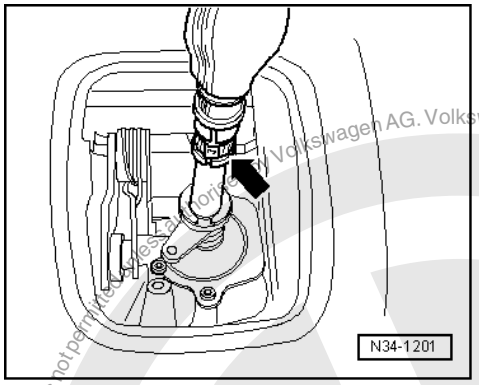

- Pull the gear stick cover off the centre console.
- -> Destroy clip (arrow) and pull gear stick knob off with cover.

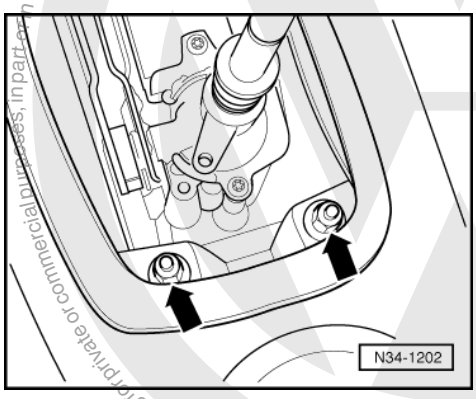

- -> Remove nuts -arrows- for console.
- Remove cross supports below the exhaust system.
- Separate exhaust system after front exhaust pipe at double clamp.

=> Repair group 26; Removing and installing parts of exhaust system. Removing and installing parts of exhaust system.

- Remove front heat shield.
- Loosen front part of rear heat shield.
- Unbolt selector housing from body.
- Swing gear stick housing down and remove with selector cables.

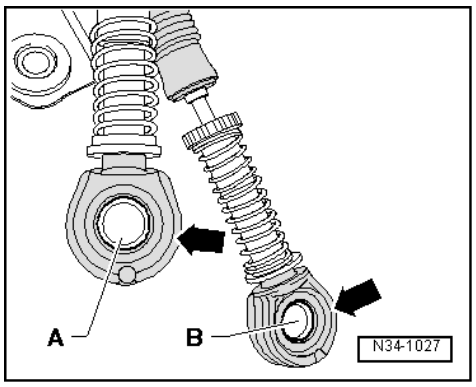

Volkswagen AG. Volkswagen AG does not guarantee or accept any liability with respect to the correctness of information in this document. Copyright by Volkswagen AG. Protected by copyright. Use for private or commercial purposes, in part or in whole, is not permitted unless authorised.
satelettronica

Installing

Installation is carried out in the reverse sequence, when doing this note the following:

- -> Smear a small amount of polyurea grease in recesses of cable locking mechanism -A- and gate cable locking mechanism -B-.

Note:

The seals -arrows- outside the recess must be grease free.

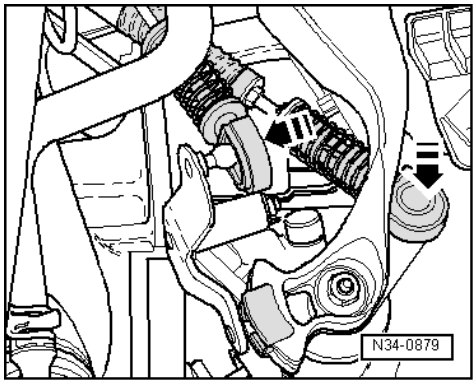

- -> Press gear selector cable onto gearbox selector lever and gate selector cable onto relay lever (arrows).

Adjusting selector mechanism => Page 70 .

Tightening torques

Selector housing to body	25 Nm
Cross support to body	25 Nm
Selector cable spt. brkt to gearbox	25 Nm

2.7 - Adjusting gear selector mechanism from 10.99

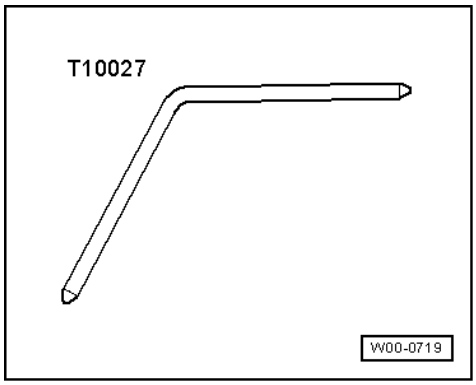

Special tools and workshop equipment required

- T10027 Pin

Notes:

The following points are essential to ensure correct selector adjustment:

Protected by copyright. Copying for private or commercial purposes, in part or in whole, is not permitted unless authorised by Volkswagen AG. Volkswagen AG does not guarantee or accept any liability with respect to the correctness of information in this document. Copyright by Volkswagen AG.
satelettronica

- Moving parts of selector mechanism and transmission elements must be in proper condition.
- Selector mechanism must move freely.

The gearbox, clutch and clutch mechanism must also be in proper condition.

- Gearbox in neutral position.

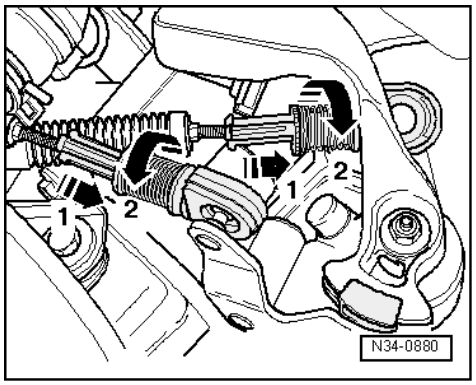

- -> Secure locking mechanism on gear selector cable and gate selector cable by pulling forwards until stop (arrow -1-) and then turning to left to lock (arrow -2-).

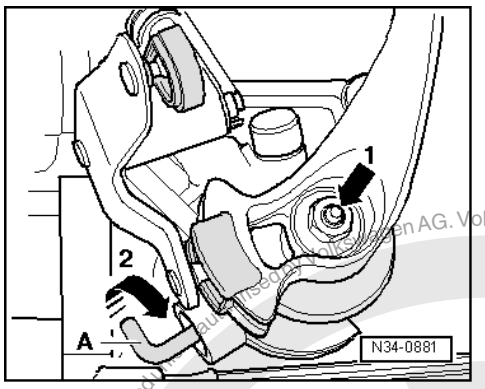

-> Set selector shaft as follows:

- Press selector shaft down (direction of arrow -1-).
- Turn right-angle piece -A- in direction of arrow -2- when pressing selector shaft down.
- Pull the gear stick cover off the centre console.
- Pull rubber cover towards gear stick knob, if part of original equipment.

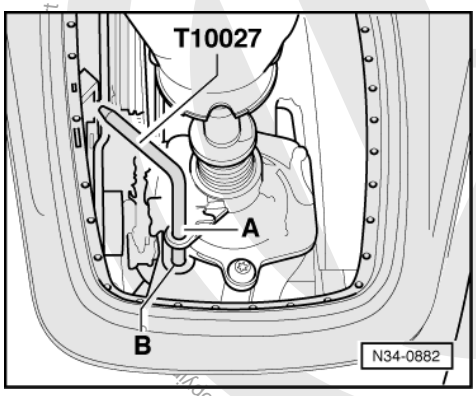

-> Set gear stick as follows:

- Select neutral with gear stick.

satelettronica
Copyright by Volkswagen AG. Volkswagen AG does not guarantee or accept any liability with respect to the correctness of information in this document. Copyright by Volkswagen AG.
Protected by copyright. Copying or reproduction not permitted without authorisation of Volkswagen AG.

- Then guide pin T10027 through hole -A- and into hole -B-.

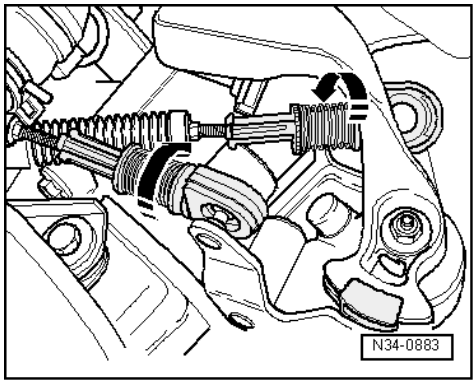

- -> Now turn locking mechanism on gear selector cable and gate selector cable to right onto stop (direction of arrow).

The spring presses the locking mechanism into normal position.

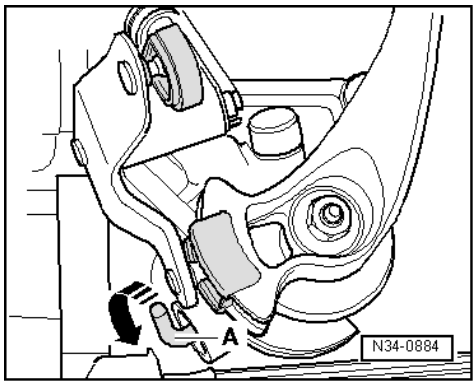

- -> Now turn right-angled piece -A- back to original position (direction of arrow).

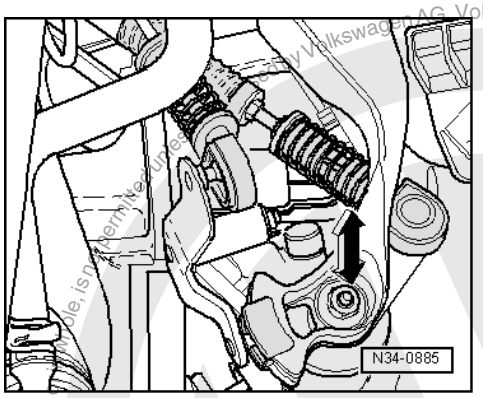

- -> The selector shaft must now be able to be moved (in direction of arrow).

Protected by copyright. Copying for private or commercial purposes, in part or whole, is not permitted unless authorised by Volkswagen AG. Volkswagen AG does not guarantee or accept any liability with respect to the correctness of information in this document. Copyright by Volkswagen AG.

satelettronica

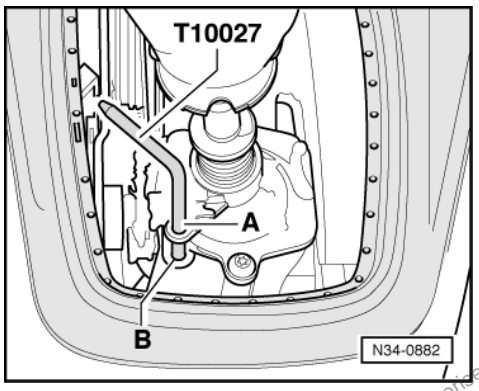

- -> Pull pin T10027 out of holes -A- and -B-.
- Clip cover into frame.

Functional check

- The gear stick lever must rest in the 3rd/4th gear gate with gearbox in neutral.

- Operate clutch.
- Select all gears several times. Pay particular attention to the operation of the reverse gear lock.

Should a gear fail to engage smoothly after repeated selection, the selector shaft play (lift) should be checked as follows:

- Engage 1st gear.

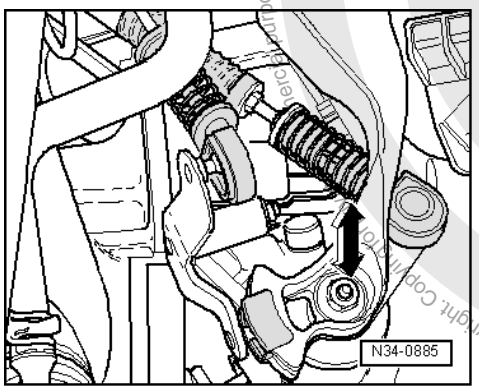

- Press gear stick to left onto stop and release.
- At the same time observe selector shaft in gear box (2nd mechanic).
- -> When moving the gear stick the selector shaft must move approx. 1 mm (in direction of arrow).
- If this is not the case, adjust selector mechanism =>Page 70 .

Protected by copyright. Copyright by Volkswagen AG. Volkswagen AG does not guarantee or accept any liability with respect to the correctness of information in this document. Copyright by Volkswagen AG.
satelettronica

3 - Removing and installing gearbox

3.1 - Removing and installing gearbox

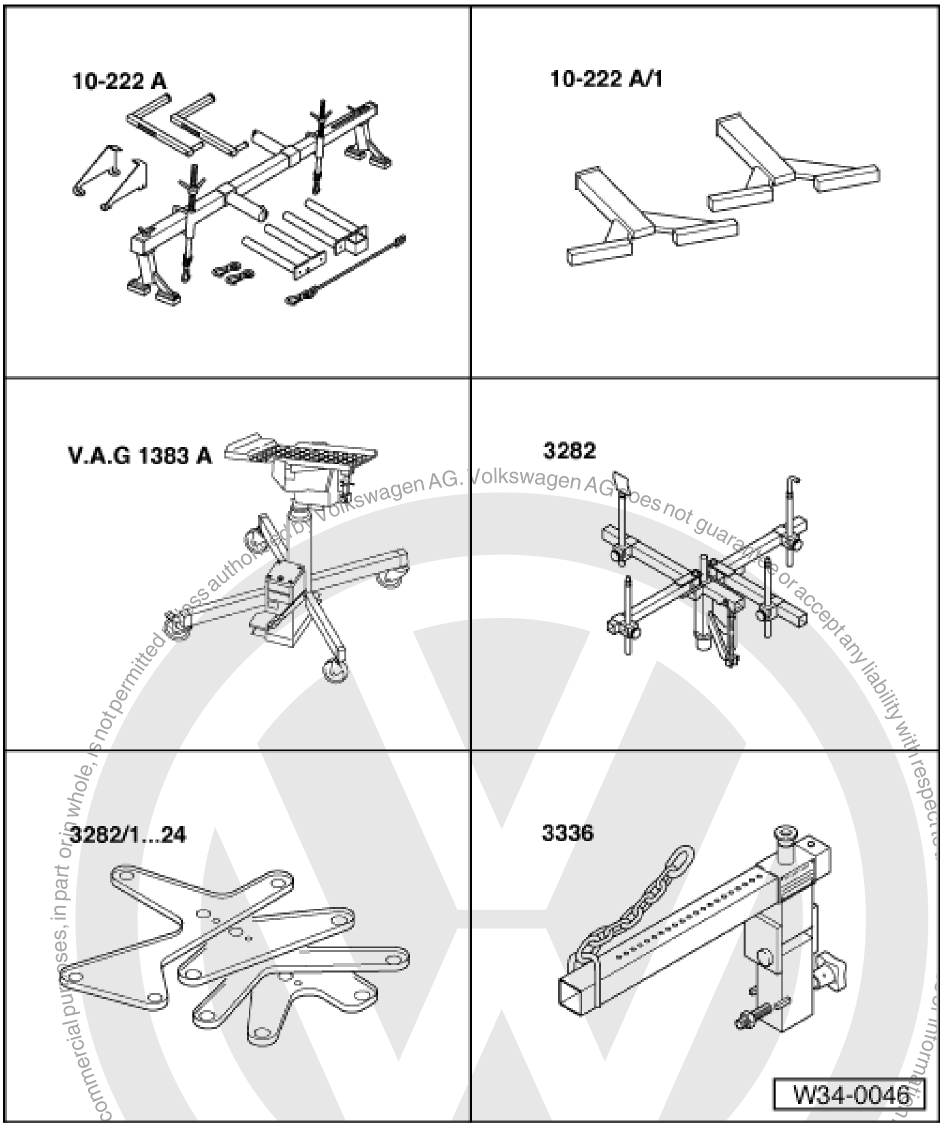

Special tools and workshop equipment required

- 10-222 A Support
- 10-222 A/1 Support
- V.A.G 1383 A Gearbox jack
- 3282 Gearbox support
- 3282/8 Adjustment plate
- 3282/48 Pin (Qty. 3)
- 3282/59 Support
- 3336 Gearbox lifting beam

Protected by copyright. Copying for private or commercial purposes, in part or in whole, is not permitted unless authorised by Volkswagen AG. Volkswagen AG does not guarantee or accept any liability with respect to the correctness of information in this document. Copyright by Volkswagen AG.

satelettronica

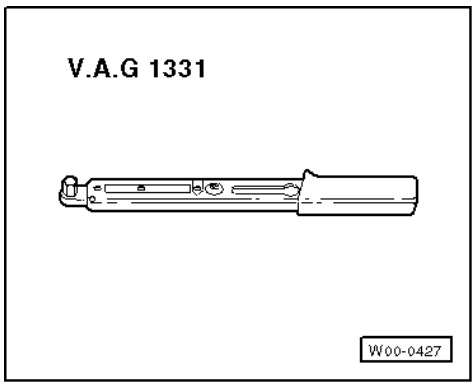

Special tools and workshop equipment required

- V.A.G 1331 Torque wrench

Removing

- Check whether a coded radio is fitted. If this is the case obtain the anti-theft coding.
- With the ignition switched off disconnect the battery earth strap.

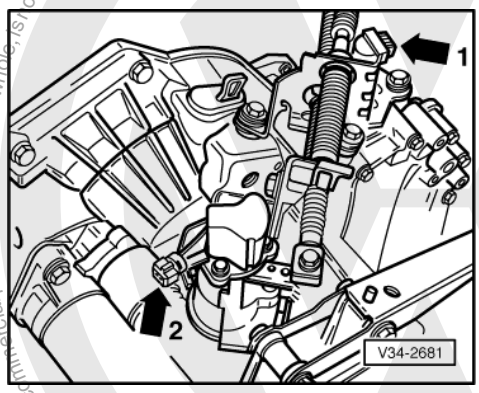

- Remove cover from engine.
- Remove air hoses between air cleaner and turbocharger.
- Remove connecting pipe between charge air cooler and intake manifold pressure hose.

=> Repair group 21; Removing and installing parts of turbocharger Removing and installing parts of turbocharger

- -> Pull connector off road speed sender (arrow 1).

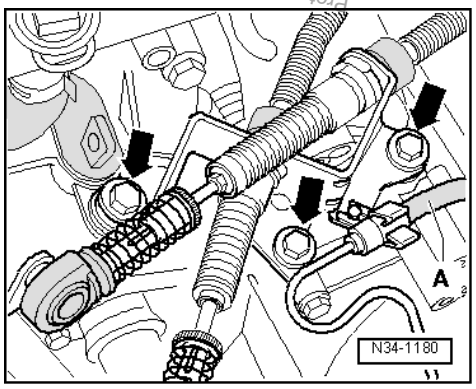

- Pull off reverse light connector (arrow 2).
- Disconnect all other electrical connections and earth wires from gearbox and from the engine/gearbox securing bolts.
- -> Unclip hose -A- from cable support bracket.

Protected by copyright. Copying for private or commercial purposes, in part or in whole, is not permitted unless authorised by Volkswagen AG. Volkswagen AG does not guarantee or accept any liability with respect to the correctness of information in this document. Copyright by Volkswagen AG.
satelettronica

- Remove cable support bracket from gearbox (arrows).

Vehicles with gear selector mechanism up to 09.99

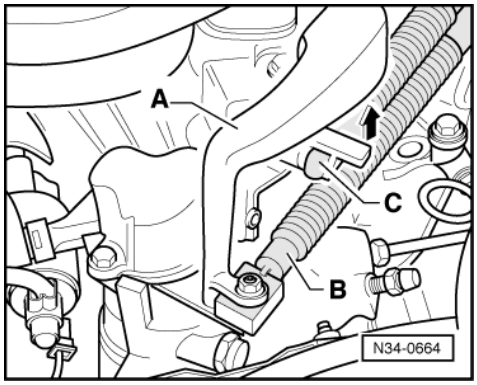

- -> Remove balance weight -A- and gear selector cable -B- from gear selector lever.
- Take off gear selector cable with washer and square nut (self-locking).
- Pull gate selector cable off actuating arm/relay lever -C- to do this lift lug in direction of arrow.

Vehicles with gear selector mechanism from 10.99

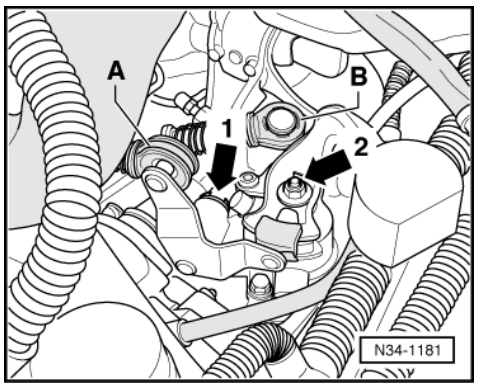

- -> Pull off gate selector cable -A- with relay lever, remove circlip -arrow 1- to do this.
- Remove gear selector cable -B- with gearbox selector lever, remove nut -arrow 2- to do this.
- Tie selector cable with gearbox selector lever and gate selector cable with relay lever up.

Continuation for all vehicles

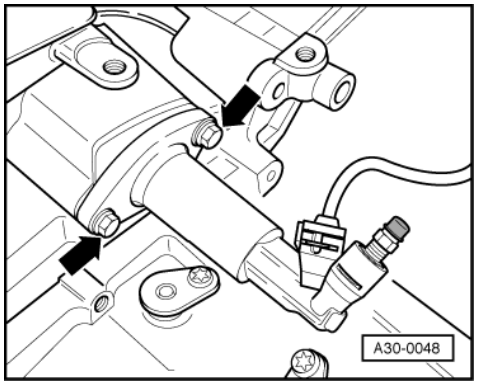

- -> Remove slave cylinder place to side and secure with wire, do not disconnect pipes.

Note:

Do not depress clutch pedal.

satelettronica
Protected by copyright. Copying for private or commercial purposes, in part or in whole, is not permitted unless authorised by Volkswagen AG. Volkswagen AG does not guarantee or accept any liability with respect to the correctness of information in this document. Copyright by Volkswagen AG.

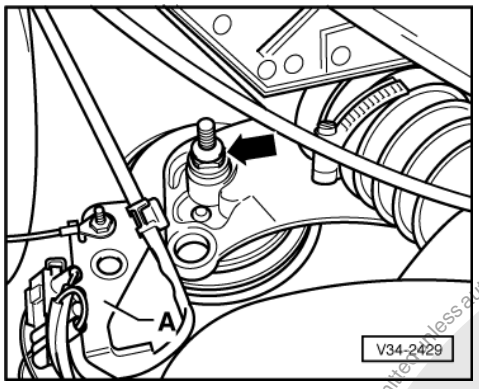

- -> If fitted remove connector mounting plate -A-.
- Remove bolt (arrow) on engine console/sub-frame, right.

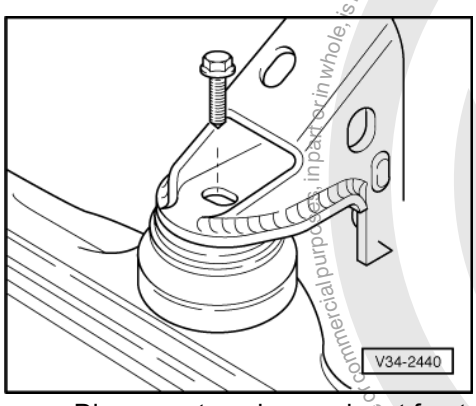

- -> Disconnect engine carrier at front console.
- If fitted remove retaining bracket for coolant hose, coolant pipe and securing plate for electrical connections from front of console.
- Remove coolant system expansion reservoir and lay to one side.

Note:

Do not open cooling system.

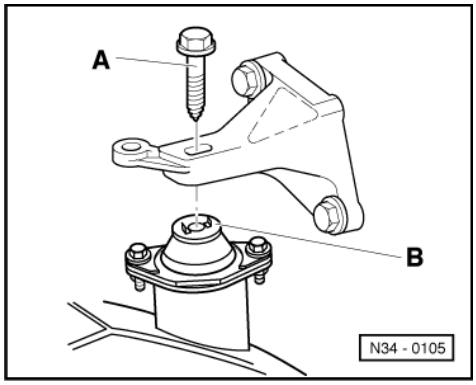

- -> Remove hexagon bolt -A- from left hand hand assembly mounting -B-.

- Remove earth strap at engine/gearbox upper securing bolt.
- Remove engine/gearbox upper securing bolts.
- If there are hoses and cable connections in area of engine mounting eye for support 10-222A, remove these now.

Protected by copyright. Copyright by Volkswagen AG.
Commercial purposes, in part or in whole, is not permitted unless authorised by Volkswagen AG. Volkswagen AG does not guarantee or accept any liability with respect to the correctness of information in this document.
satelettronica

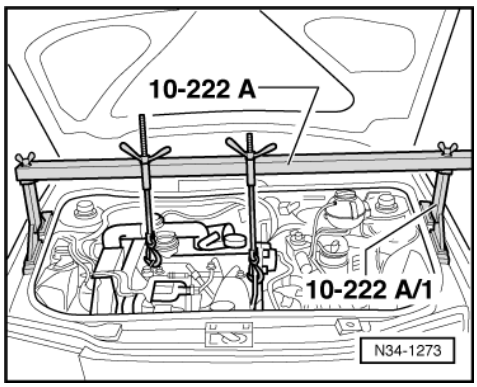

- -> Fit support bar 10-222A together with legs 10-222 A/1.
- Take weight of engine/gearbox assembly on the spindles.
- If not already removed, remove wiring and cable from gearbox.
- Remove insulation tray below engine/gearbox, if fitted.
- Remove charge air cooler.

=> Repair group 21; Removing and installing parts of turbocharger Removing and installing parts of turbocharger

- Remove power assisted steering pipe bracket from starter.
- Remove starter.

=> Repair group 27; Removing and installing starter. Removing and installing starter.

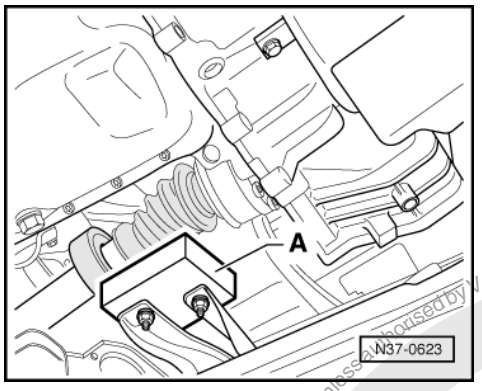

- Remove front console.
- Separate exhaust system in front of catalyst.
- -> Remove vibration damper -A- from sub-frame. Mark installation position.
- Remove right hand inner constant velocity joint protective cover from engine if fitted.
- Disconnect drive shafts from drive flanges and tie-up.
- When doing this do not damage surface protection.

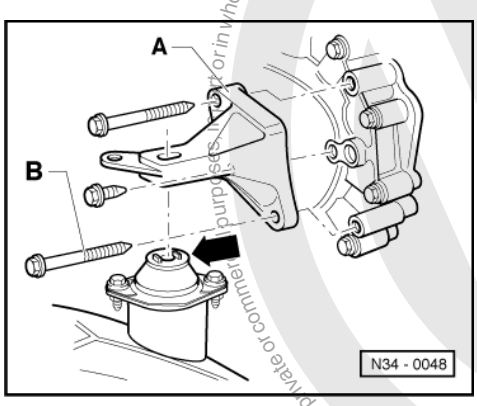

- -> Removing gearbox console -A- from gearbox.

Protected by copyright. Copying for private or commercial purposes, in part or in whole, is not permitted unless authorised by Volkswagen AG. Volkswagen AG does not guarantee or accept any liability with respect to the correctness of information in this document. Copyright by Volkswagen AG.
satelettronica

To do this remove gearbox console securing bolt -B- as follows:

- Lift engine/gearbox assembly via both spindles until the exhaust system contacts the heat shield; ensure that selector cable support bracket is not jammed.
- Push engine/gearbox assembly forwards (2nd mechanic required) and remove lower gearbox console securing bolt -B-.
- Then tie drive shaft up as high as possible. When doing this ensure sufficient clearance between constant velocity joint and flange shaft.

- Lower engine/gearbox assembly via both spindles to previous position and push as far as possible to the right.

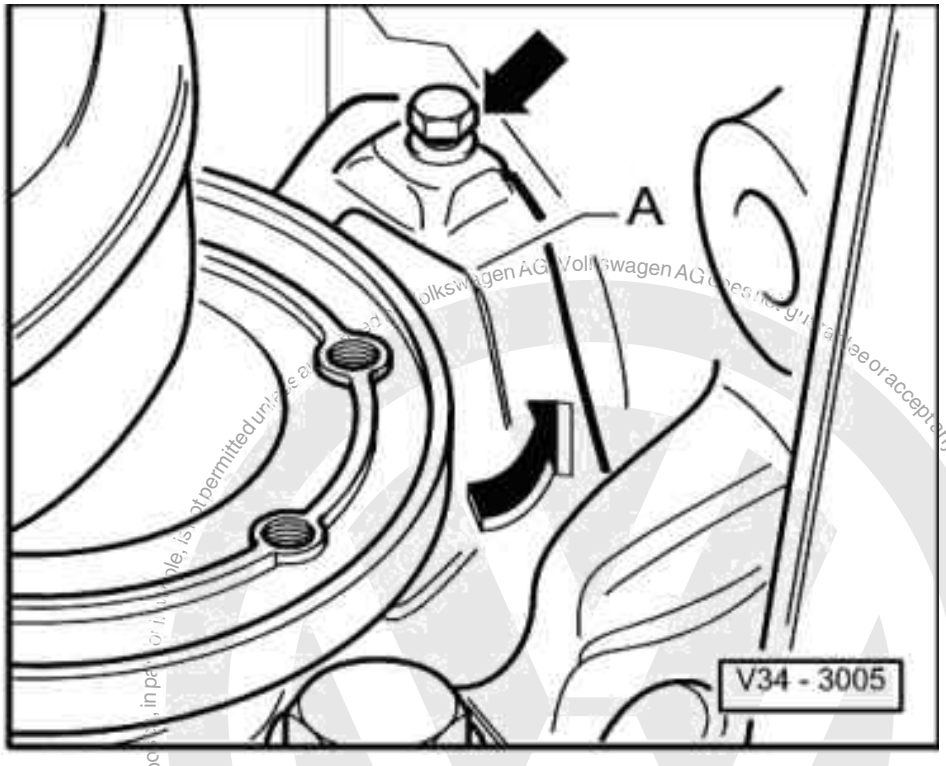

Note:

Do not damage P.A.S. pipe when moving engine/gearbox assembly.

- Then slightly lower engine/gearbox assembly via left spindle of support bracket 10-222A.
- -> Remove flywheel small cover plate -A- behind the right-hand flanged shaft (arrows).
- Remove lower flywheel cover plate, if part of original equipment.

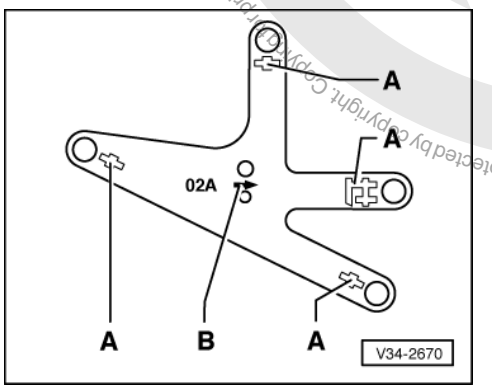

- Assemble gearbox jack with gearbox support 3282, adjustment plate 3282/8 for "02A" gearbox and support elements as follows:
- Place adjustment plate 3282/8 on gearbox support 3282. (Adjustment plate only fits in one position).
- Align arms of gearbox support according to holes in adjustment plate.

satelettronica

- -> Bolt on support elements -A-, as illustrated, on adjustment plate.

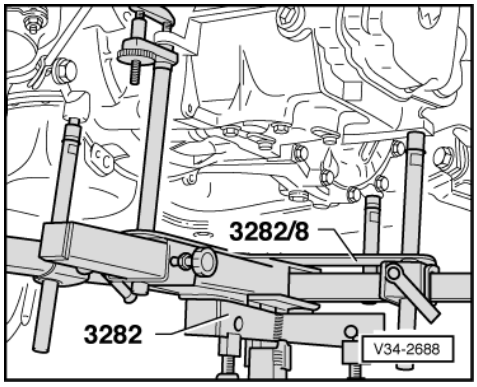

- -> Place gearbox jack under vehicle, arrow symbol -B- (=> Illustration V34-2670) on adjustment plate points to front of vehicle.
- Align adjustment plate parallel to gearbox and lock safety supports on gearbox.
- Remove lower engine/gearbox securing bolt.
- Press gearbox off dowels and carefully lower.

Note:

Do not damage P.A.S pipe when lowering gearbox.

- Press engine forward slightly when lowering gearbox.
- Continually correct the gearbox position via the gearbox jack spindles.

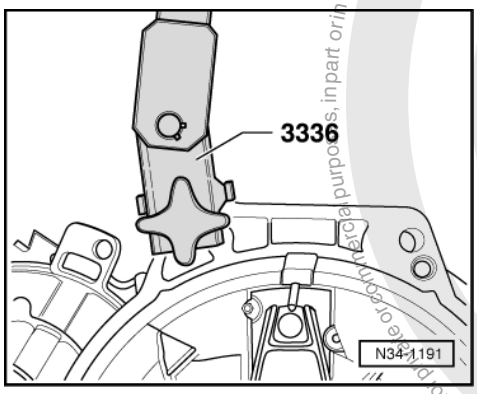

Transporting the gearbox

- -> Bolt gearbox lifting device 3336 to clutch housing.

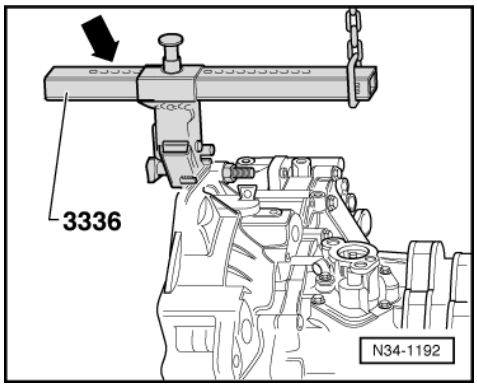

- -> Set support arm on sliding piece with locking pin (arrow).

Protected by copyright. Copying for private or commercial purposes, in part or in whole, is not permitted unless authorised by Volkswagen AG. Volkswagen AG does not guarantee or accept any liability with respect to the correctness of information in this document. Copyright by Volkswagen AG.
satelettronica

No. of holes visible = 5

- Lift gearbox with workshop crane and gearbox lifting device 3336.
- Place gearbox, for example onto transport container.

Installing

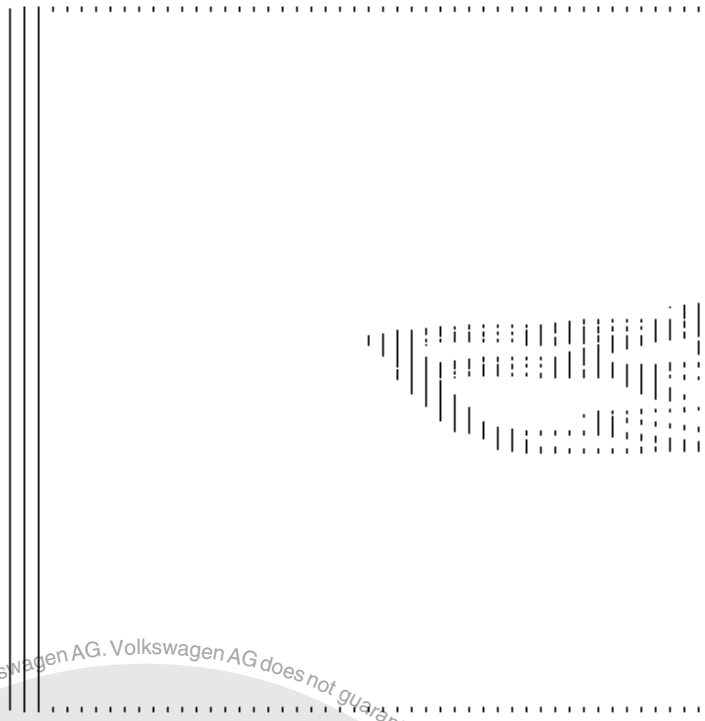

Notes:

- -> Before installing gearbox press clutch release lever towards gearbox housing and secure with assembly pin, assembly bolt or M 8 x 35 bolt. Remove after gearbox has been installed. The hole will then be sealed by the 3rd cable support bracket securing bolt or plugged.

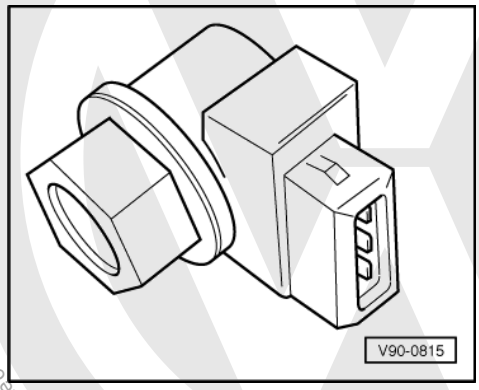

- -> When replacing gearbox, the senders for speedometer (Fig.), gear selector and relay lever must be transferred to new assembly.

- Clean input shaft splines and lightly grease with G000 100 grease.

The clutch plate must be able to slide lightly to and fro on the input shaft.

- Check whether dowel sleeves for aligning engine/gearbox are fitted in cylinder block, install if necessary.
- Ensure that the intermediate plate is correctly positioned on engine.

Copyright. Copying for private or commercial purposes, in part or in whole, is not permitted unless authorised by Volkswagen AG. Volkswagen AG does not guarantee or accept any liability with respect to the correctness of information in this document. Copyright by Volkswagen AG.
satelettronica

- Assemble gearbox jack with gearbox support 3282, adjustment plate 3282/8 for "02A" gearbox and support elements as follows:

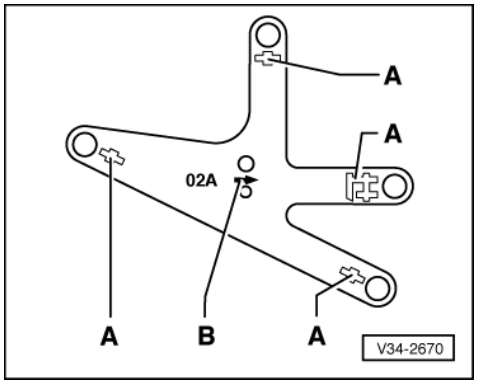

- Place adjustment plate 3282/8 on gearbox support 3282. (Adjustment plate only fits in one position).
- Align arms of gearbox support according to holes in adjustment plate.
- -> Bolt on support elements -A-, as illustrated, on adjustment plate.

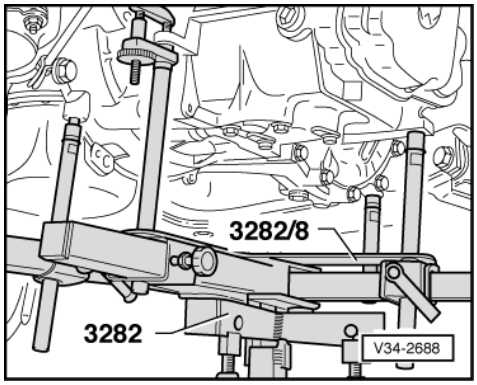

- Place gearbox on gearbox jack.
- Align adjustment plate and gearbox parallel with one another and lock safety supports on gearbox.
- -> Place gearbox jack under vehicle, arrow symbol -B- (=> Illustration V34-2670 on previous page) on adjustment plate points to front of vehicle.
- Insert gearbox.

Note:

Do not damage P.A.S pipe.

- Install lower engine/gearbox securing bolts.

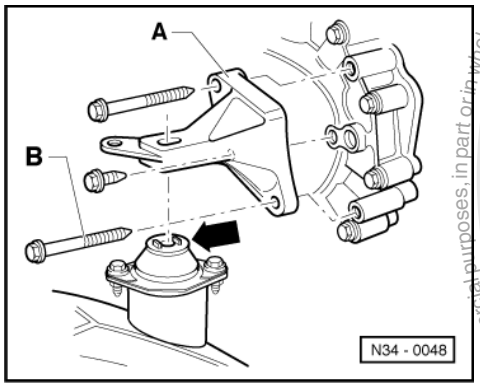

- Install upper engine/gearbox securing bolts.
- -> Install gearbox console -A-.

satelettronica
Protected by copyright. Copying for private or commercial purposes, in part or in whole, is not permitted unless authorised by Volkswagen AG. Volkswagen AG does not guarantee or accept any liability with respect to the correctness of information in this document. Copyright by Volkswagen AG.

Install gearbox console securing bolt -B- as follows:

- Lift engine/gearbox assembly via both spindles and push towards front end (2nd mechanic required) and then install lower gearbox console securing bolt -B-.

- Install front console.
- Install starter.

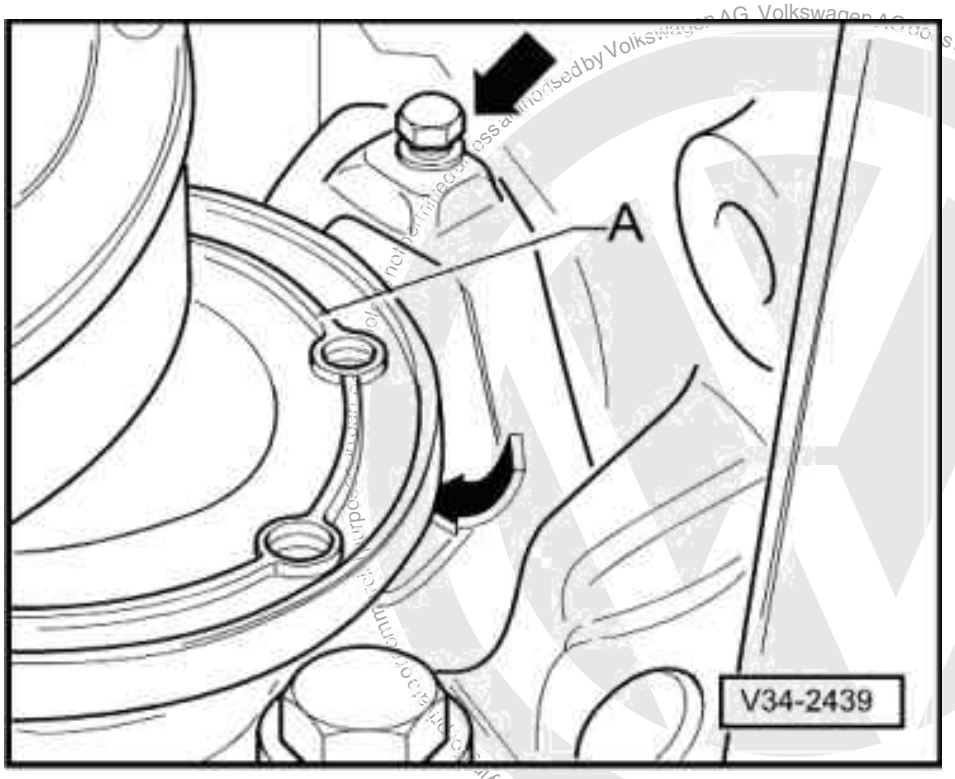

=> Repair group 27; Removing and installing starter. Removing and installing starter.

- Align engine/gearbox in installation position.
- Install power assisted steering pipe bracket on starter.
- -> If it was removed install small cover plate -A- behind right-hand drive flange (arrows).
- If it was removed install large cover plate for clutch.
- Fit drive shafts to gearbox.

=> Running gear, axles, steering; Repair group 40; Servicing drive shafts, Removing and installing drive shafts Servicing drive shafts, Removing and installing drive shafts

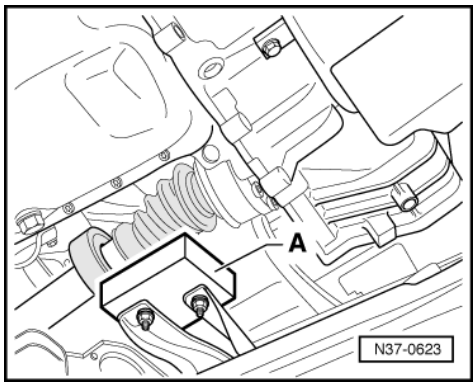

- Bolt right-hand drive shaft protective cover to engine if necessary.

satelettronica

Protected by copyright. Copying for private or commercial purposes, in part or in whole, is not permitted unless authorised by Volkswagen AG. Volkswagen AG does not guarantee or accept any liability with respect to the correctness of information in this document. Copyright by Volkswagen AG.

- -> Screw balance weight -A- to subframe.

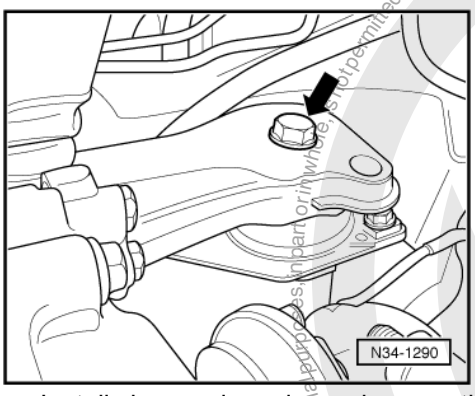

- Install charge air cooler and connecting pipes between charge air cooler and inlet manifold pressure hose.

=> Repair group 21; Removing and installing parts of turbocharger Removing and installing parts of turbocharger

- -> Insert hexagon bolt on gearbox assembly mounting (arrow).

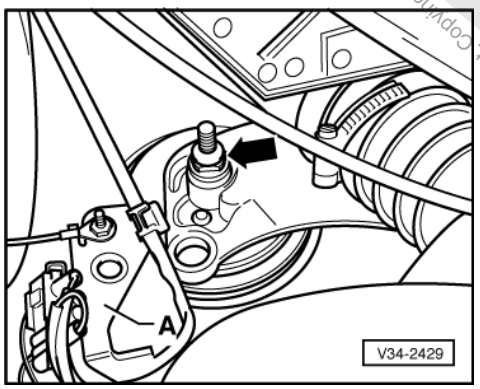

- -> Install bolt (arrow) on engine console/sub-frame, right. Fit connector mounting plate -A-, if fitted.

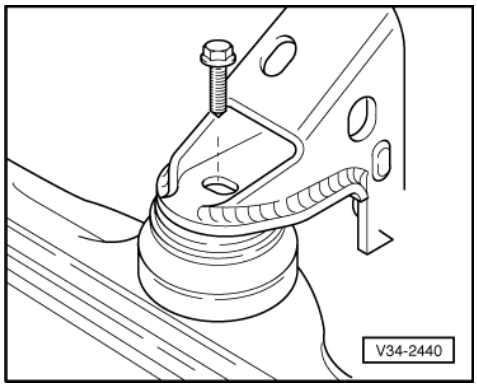

- -> Install front console securing bolt to engine mounting.

satelettronica

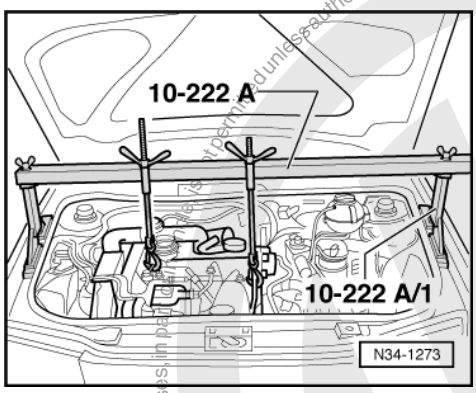

- -> Remove support bracket 10-222A

Warning!
Do not remove support bar 10-222A until the bolts securing the left-hand gearbox console have been tightened to torque setting.

- Align engine/gearbox mountings stress-free by shaking assembly and tighten to tightening torque.

=> Repair group 10; Removing and installing engine. Removing and installing engine.

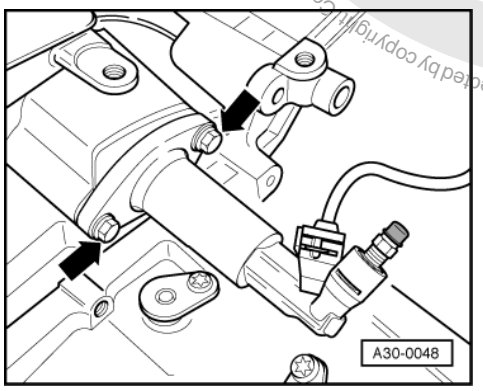

- -> Install slave cylinder -arrows-.

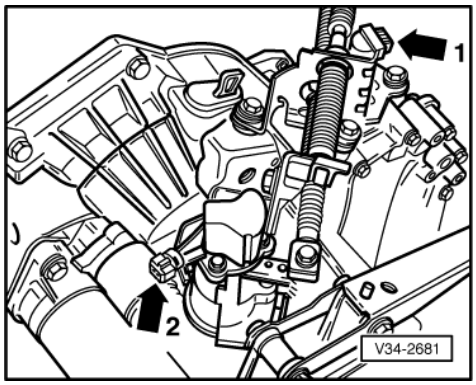

- -> Connect speedometer sender connector (arrow 1).
- Connect reverse light connector (arrow 2).
- Install air hoses between air cleaner and turbocharger.

Protected by copyright. Copyright by Volkswagen AG.
Copyright by Volkswagen AG. Volkswagen AG does not guarantee or accept any liability with respect to the correctness of information in this document. Copyright by Volkswagen AG.
Reproduction is not permitted unless authorised by Volkswagen AG. Volkswagen AG does not guarantee or accept any liability with respect to the correctness of information in this document. Copyright by Volkswagen AG.
satelettronica

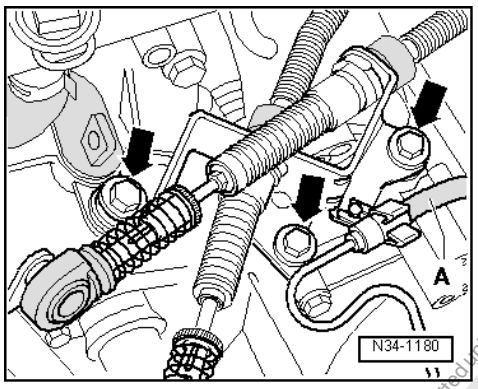

- -> Install cable support bracket on gearbox -arrows-, if necessary push hose -A- onto cable support bracket.

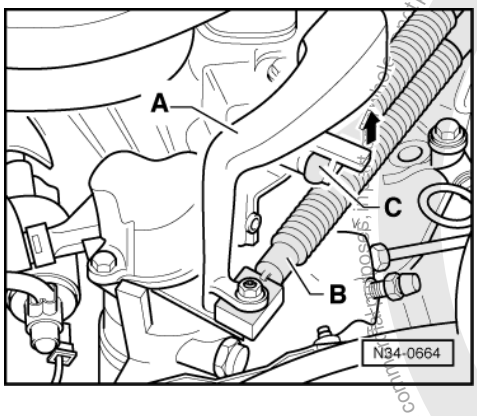

Vehicles with gear selector mechanism up to 09.99

- -> Install gear selector cable -B- and balance weight -A- on gear selector lever.
- Fit gate selector cable on follower/relay lever -C- to do this lift lug in direction of arrow.

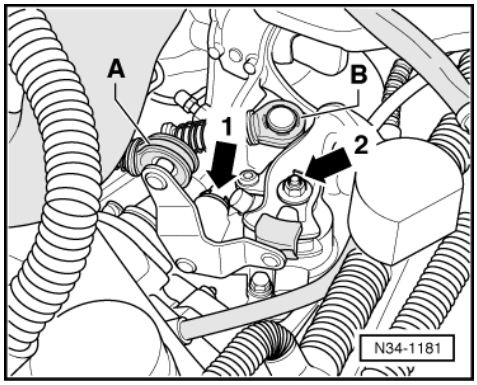

Vehicles with gear selector mechanism from 10.99

- -> Fit gear selector cable -B- with gearbox selector lever (arrow 2).
- Fit gate selector cable -A- with relay lever and secure with a circlip (arrow 1).

Continuation for all vehicles

- Secure coolant system expansion reservoir.
- Reconnect earth strap to battery.

Note:

Note radio coding for vehicles with coded radio.

Protected by copyright. Copying for private or commercial purposes, in part or in whole, is not permitted unless authorised by Volkswagen AG. Volkswagen AG does not guarantee or accept any liability with respect to the correctness of information in this document. Copyright by Volkswagen AG.
satelettronica

- Checking gearbox oil =>Page 88 .
- Install insulation tray below engine/gearbox, if fitted.
- Adjusting gear selector mechanism up to 09.99 => Page 52 .
- Adjusting gear selector mechanism from 10.99 => Page 70 .
- Install engine cover.

Tightening torques

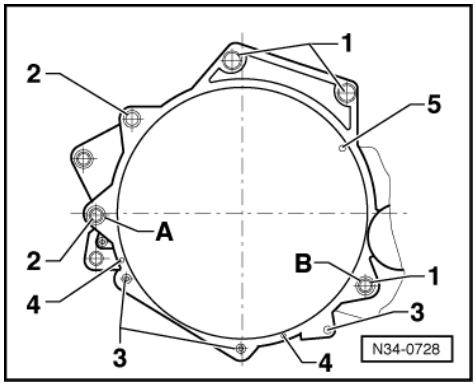

-> Gearbox to engine

Item	Bolt	Qty.	Nm
1	M 12 x 55	3	80
2 1)	M 12 x 150	2	80
3 2)	M 10 x 50	3	60
4 3)	M 7 x 12	2	10
5 4)	M 7 x 12	1	10

1) Also starter to gearbox

2) Only on engines with an aluminium sump,

3) Large cover plate for flywheel only on engines with heat steel sump (sump painted black)

4) Small cover plate for flywheel

Items A + B - Dowel sleeves

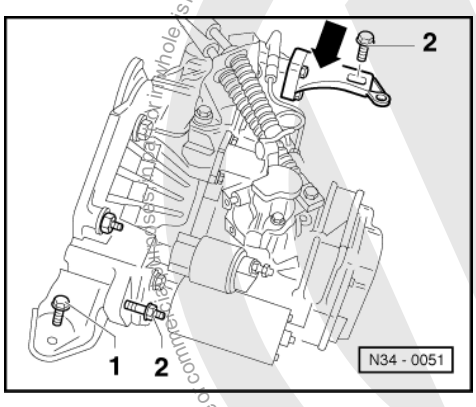

-> Assembly mountings

Pos.	Bolt	Qty.	Nm
1	M 10 x 30	1	50

satelettronica
Protected by copyright. Copying for private or commercial purposes, in whole or in part, is not permitted unless authorised by Volkswagen AG. Volkswagen AG does not guarantee or accept any liability with respect to the correctness of information in this document. Copyright by Volkswagen AG.

Pos.	Bolt	Qty.	Nm
2	M 10 x 45	2	50

Left gearbox console to gearbox (arrow)	25 Nm
Right engine console to assembly carrier	60 Nm

Drive shaft protective cover to engine	35 Nm
Selector cable spt. brkt to gearbox	25 Nm
Selector cable bolt to gearbox selector lever	25 Nm
Balance weight to gearbox selector lever	30 Nm

4 - Checking gear oil

4.1 - Checking gear oil

Gear oil specification => Page 2

- Remove insulation tray below engine/gearbox, if fitted.

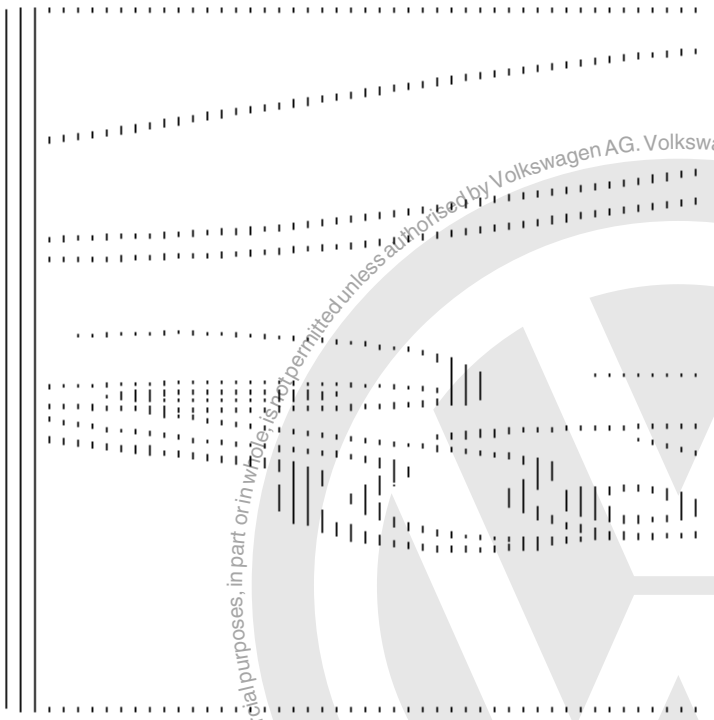

- -> Remove plug (arrow) to check oil

The oil level is correct when the gearbox is full to the lower edge of the filler hole.

- Fit plug (arrow).

When filling with new oil note following:

- Remove plug (arrow).
- Top up oil to lower edge of filler hole.
- Fit plug (arrow).
- Start engine, engage gear and allow gearbox to turn for approx. 2 minutes.
- Switch off engine and remove plug (arrow).
- Top up oil to lower edge of filler hole again.

Protected by copyright. Copying for private or commercial purposes, in part or in whole, is not permitted unless authorised by Volkswagen AG. Volkswagen AG does not guarantee or accept any liability with respect to the correctness of information in this document. Copyright by Volkswagen AG.
satelettronica

- Fit plug (arrow).

5 - Dismantling and assembling gearbox

5.1 - Dismantling and assembling gearbox

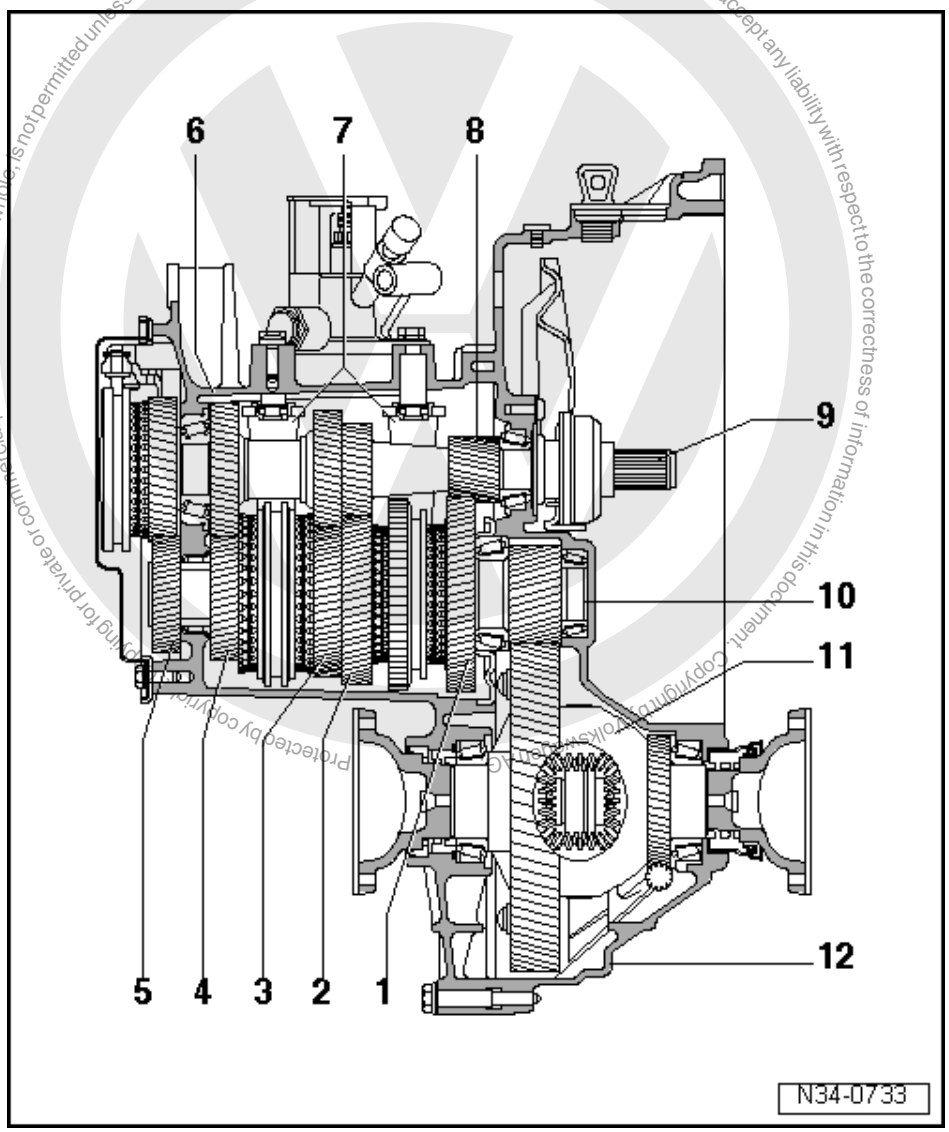

5.2 - Overview

1 1st gear
2 2nd gear
3 3rd gear
4 4th gear
5 5th gear
6 Gearbox housing
- Servicing => page 118

7 Selector mechanism
- (Selector forks)
- Dismantling and assembling => Page 139

satelettronica

8 Input gear for 1st and reverse gear

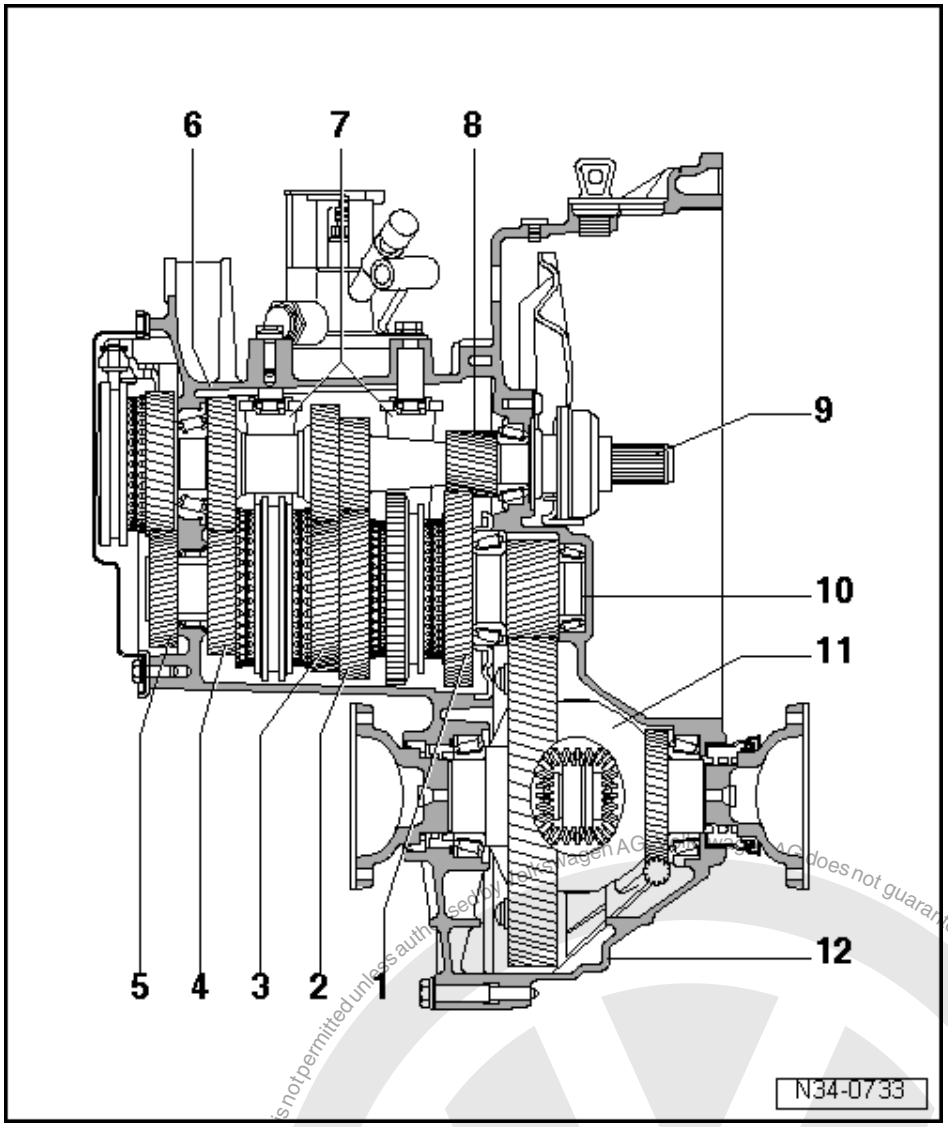

9 Input shaft
- Dismantling and assembling => page 146

10 Output shaft
- Dismantling and assembling => Page 165

11 Differential
- Dismantling and assembling => page 206

12 Clutch housing
- Servicing => Page 118

satelettronica
Protected by copyright. Copyright for private or commercial purposes, in part or in whole, is not permitted unless authorised by Volkswagen AG. Volkswagen AG does not guarantee or accept any liability with respect to the correctness of information in this document. Copyright by Volkswagen AG.

5.3 - Assembly overview

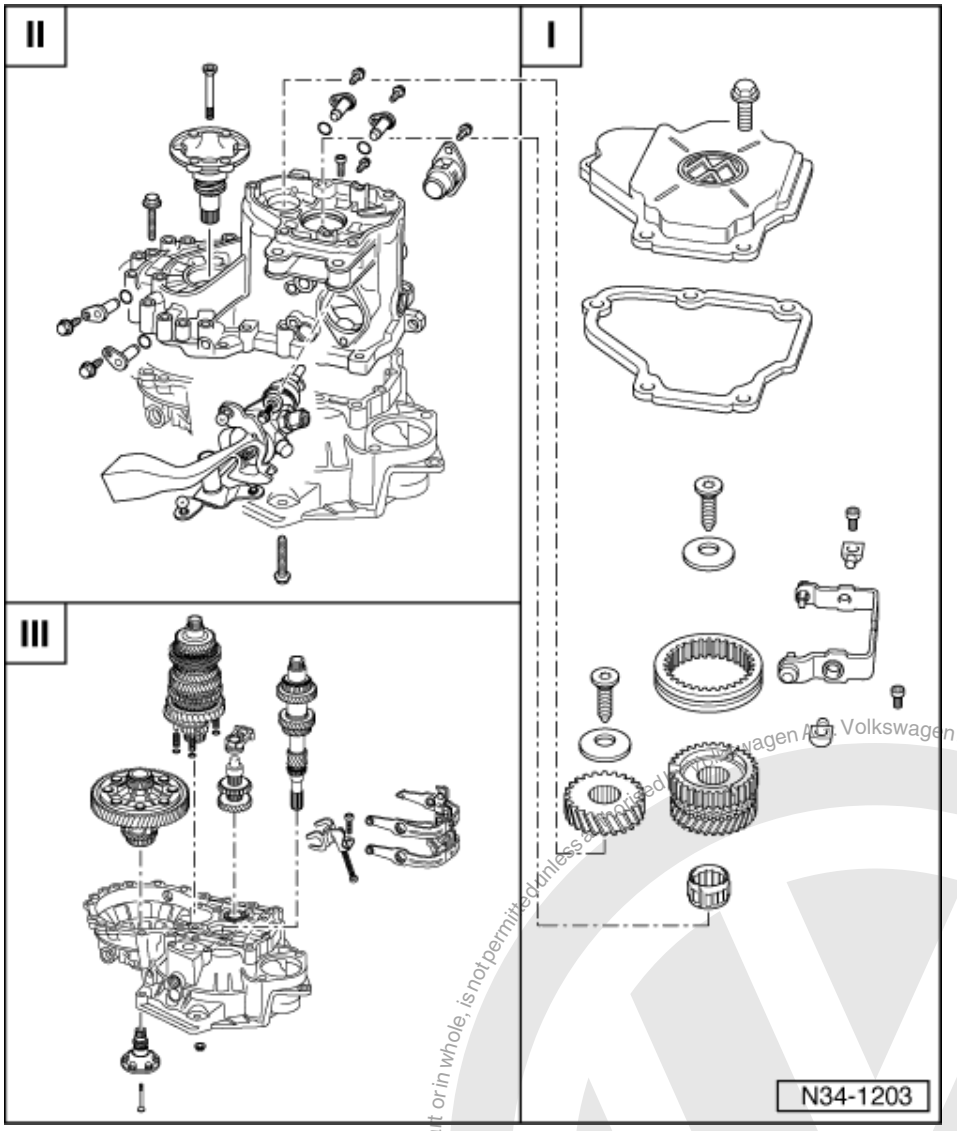

I - Removing and installing cover for gearbox housing and 5th gear => Page 92

II - Dismantling and assembling gearbox housing and shift mechanism => Page 95

III - Dismantling and assembling input shaft, output shaft, differential and selector forks => Page 97

Protected by copyright. Copying for private or commercial purposes, in part or in whole, is not permitted unless authorised by Volkswagen AG. Volkswagen AG does not guarantee or accept any liability with respect to the correctness of information in this document. Copyright by Volkswagen AG.
satelettronica

5.4 - Removing and installing cover for gearbox housing and 5th gear

Protected by copyright. Copying for private or commercial purposes, in part or in whole, is not permitted unless authorised by Volkswagen AG. Volkswagen AG does not guarantee or accept any liability with respect to the correctness of information in this document. Copyright by Volkswagen AG.

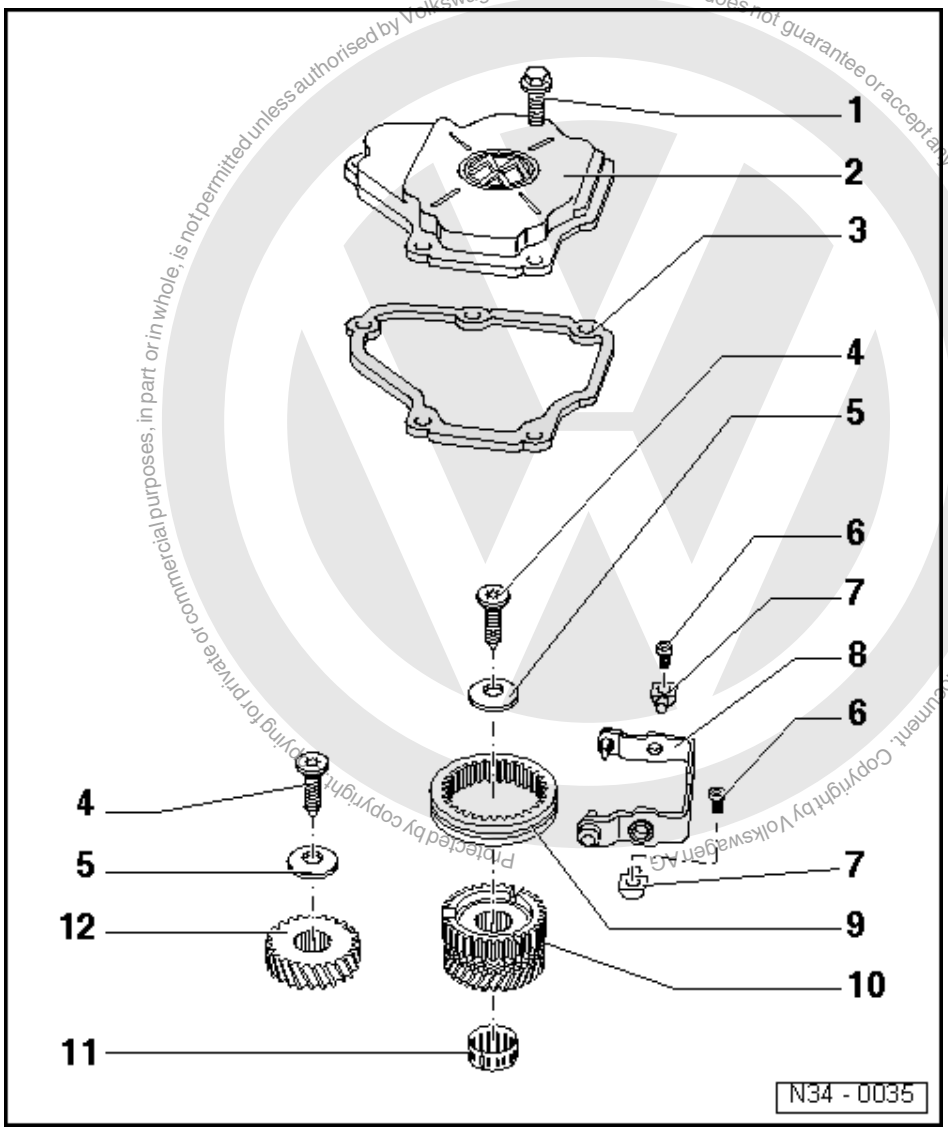

1 Hexagon bolt, 10 Nm
- For gearbox housing cover

2 Gearbox housing cover

Note:

If the gearbox cover is fitted with the gearbox installed, check oil level as follows:

- Fill with oil up to lower edge of filler hole and fit filler plug.
- Start engine, engage gear and allow gearbox to turn for approx. 2 minutes.
- Switch off engine and top up gearbox oil to lower edge of filler hole again.

satelettronica

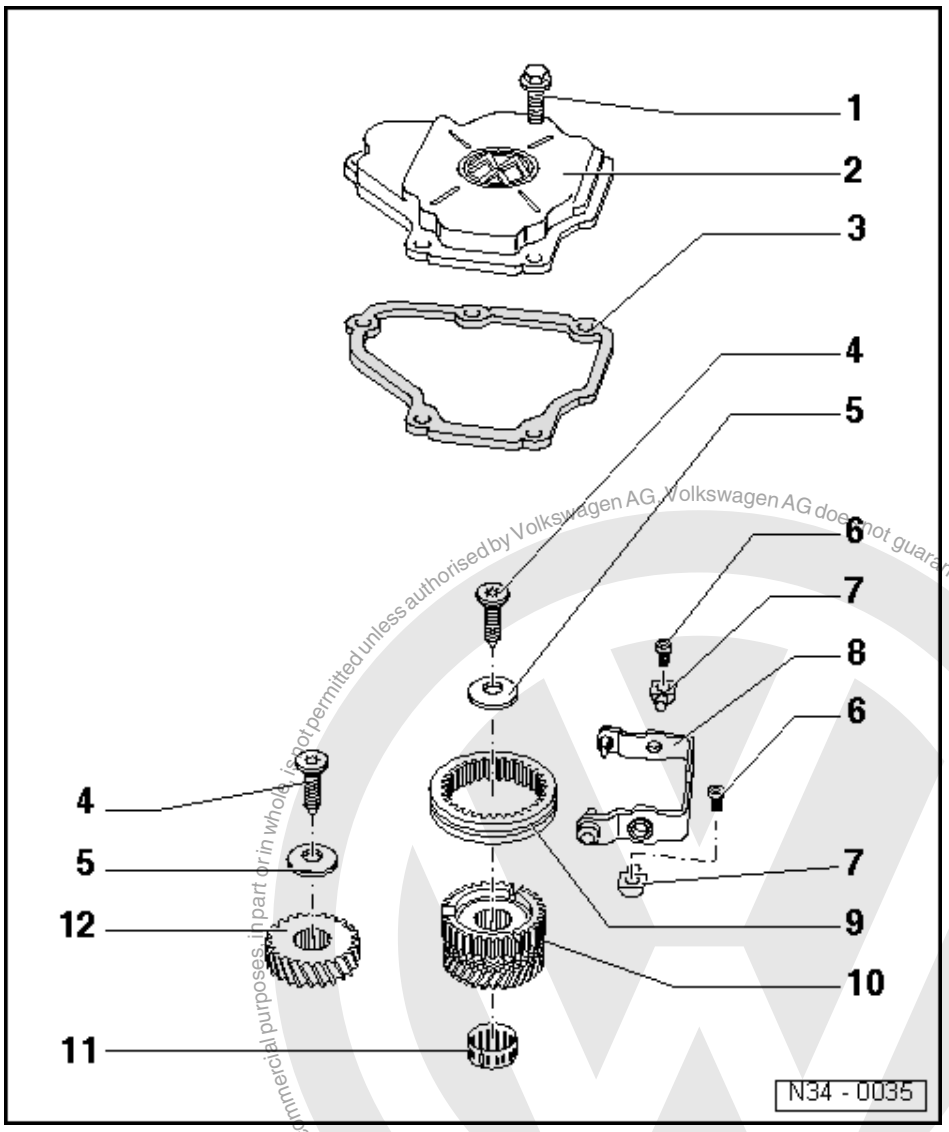

3 Gasket

4 Torx socket head bolt M10, 80 Nm
- Fitted piece on bolt head holds saucer spring washer in position

5 Dished spring
- Installing => Page 116

6 Socket head bolt, 25 Nm
- For pivot pin to gearbox housing

7 Pivot pin

8 5th gear selector fork
- Dismantling and assembling => Page 139
- Adjusting =>Page 116

Protected by copyright. Copying for private or commercial purposes, in part or in whole, is not permitted unless authorised by Volkswagen AG. Volkswagen AG does not guarantee or accept any liability with respect to the correctness of information in this document. Copyright by Volkswagen AG.
satelettronica

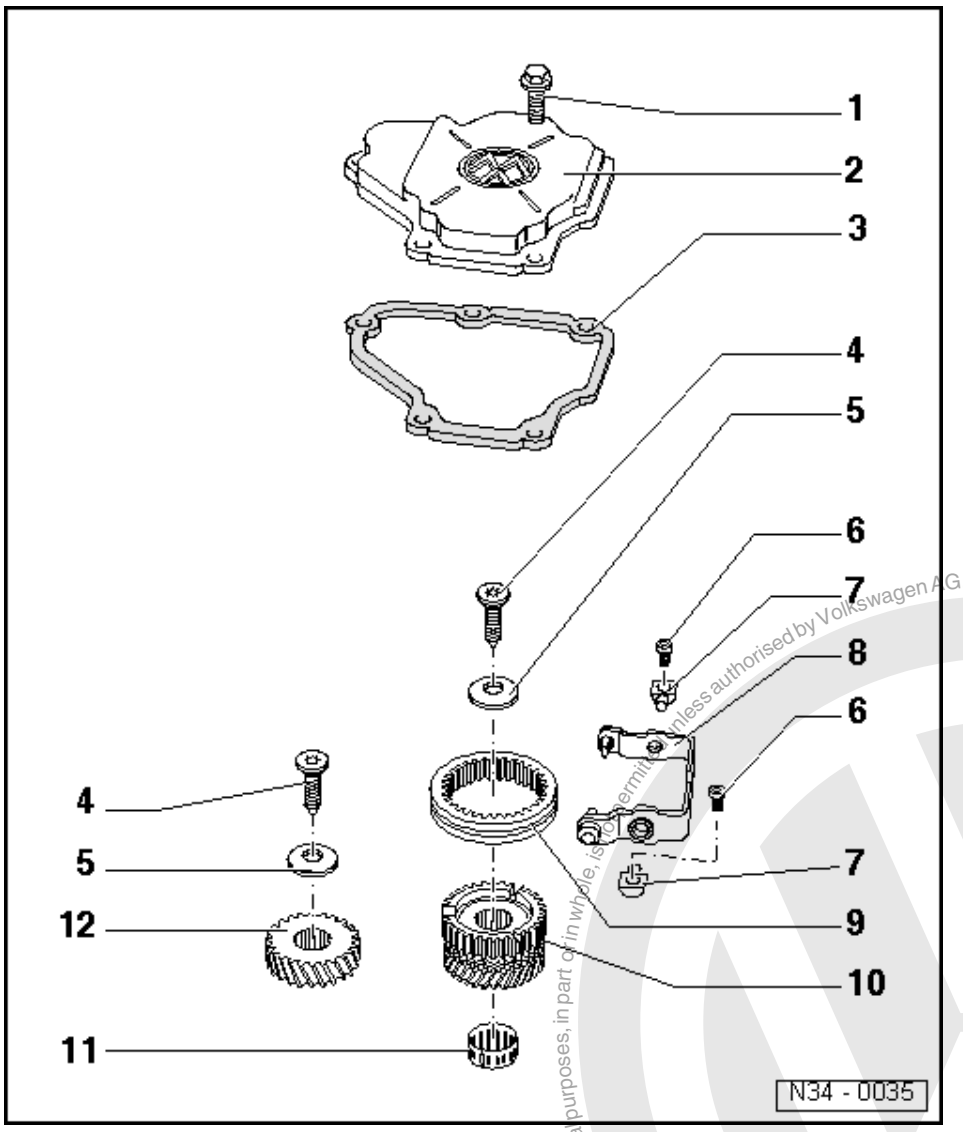

9 5th gear locking collar
- Installation position =>Page 114
- Adjusting =>Page 116

10 Synchro-hub with 5th gear and synchronizing ring
- Dismantling and assembling => Page 158

11 Needle roller bearing

12 5th speed gear wheel
- Installation position => page 113

Protected by copyright. Copying for private or commercial purposes, in part or in whole, is not permitted unless authorised by Volkswagen AG. Volkswagen AG does not guarantee or accept any liability with respect to the correctness of information in this document. Copyright by Volkswagen AG.
satelitronica

5.5 - Removing and installing gearbox housing and selector mechanism

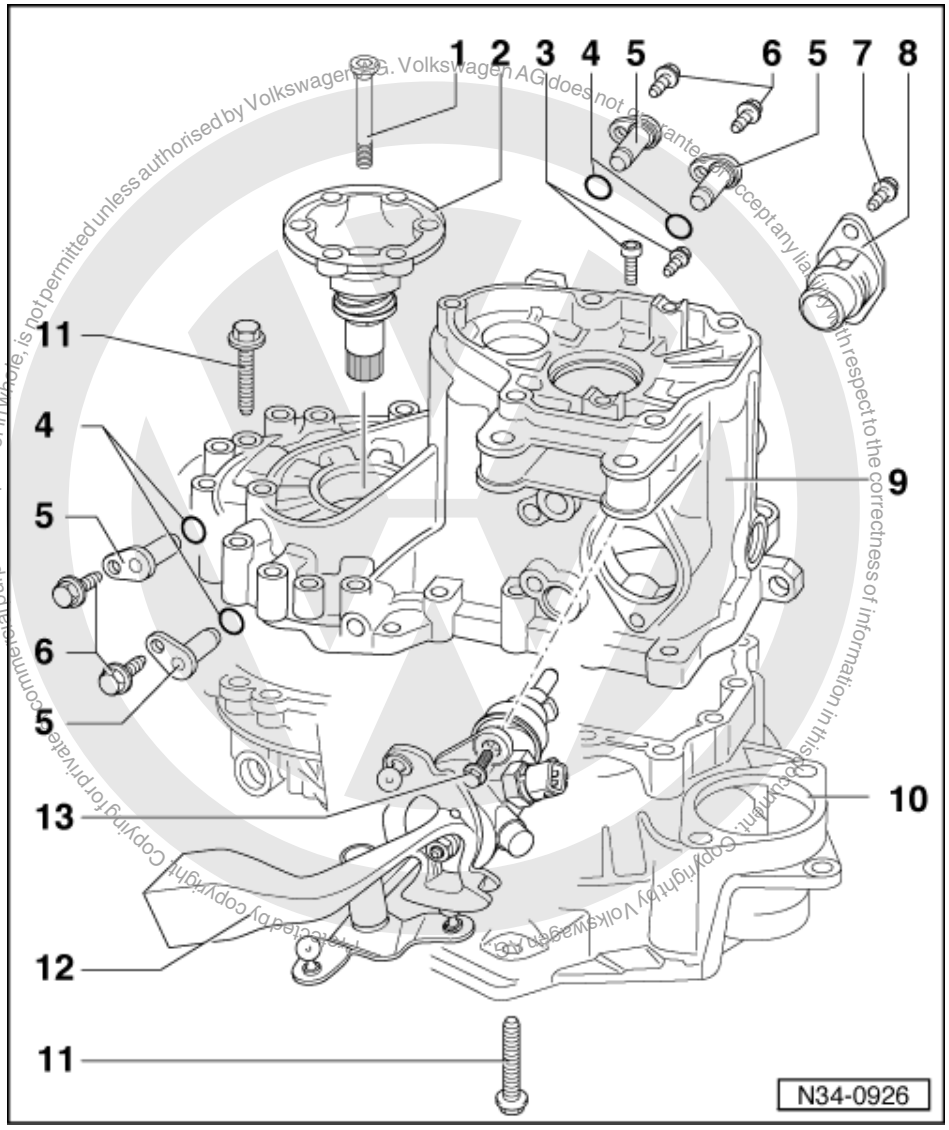

1 Countersunk head bolt, 25 Nm
2 Flanged shaft with spring
- Removing and installing => Page 104
- Assembling=> from page 206

3 Torx socket head bolt, 30 Nm
- For reverse shaft support
- Self-locking
- Always renew

4 O ring
- Always renew

5 Pivot pin
6 Bolt, 25 Nm

satelettronica

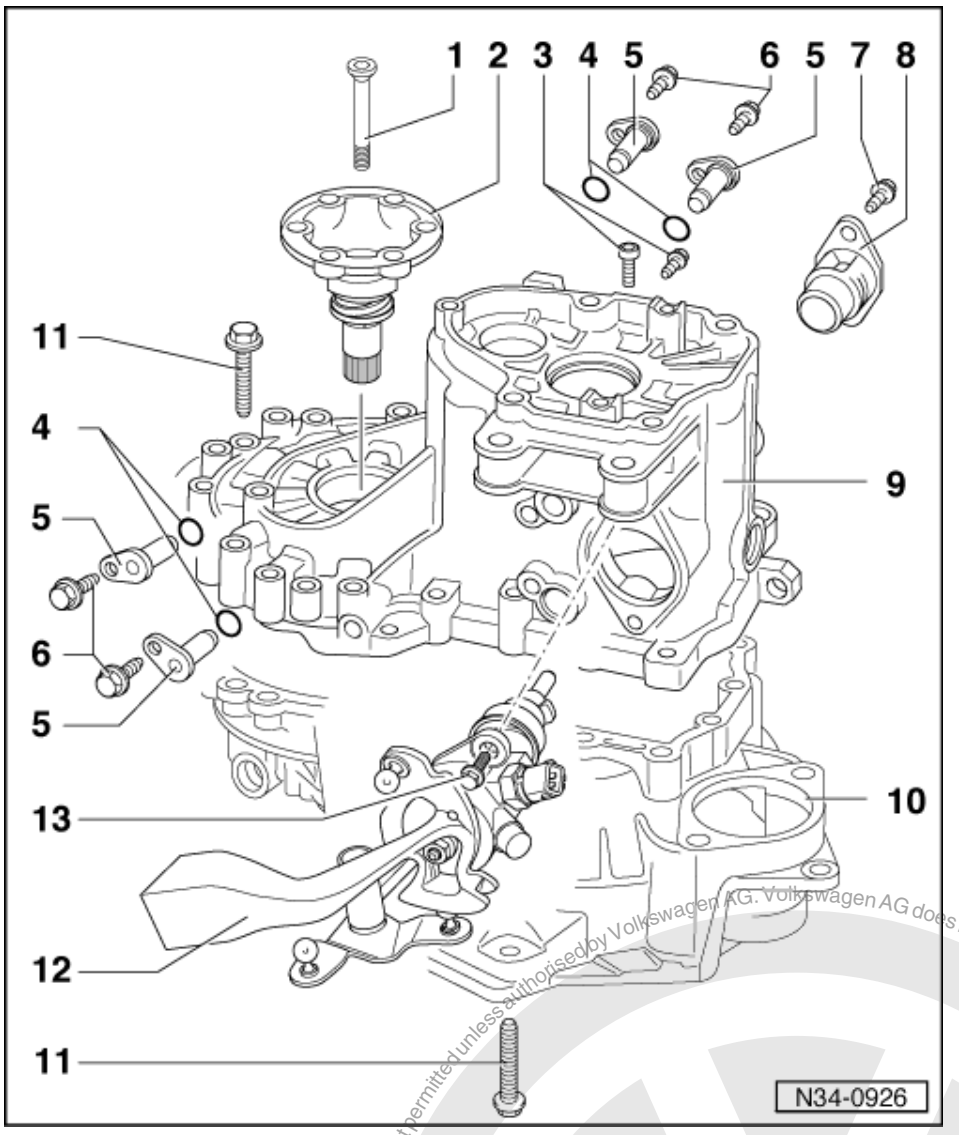

7 Bolt, 25 Nm
8 Cover plate
9 Gearbox housing
- Servicing => page 118

10 Clutch housing
- Servicing => page 118

11 Hexagon bolt, 25 Nm then turn 90°further
12 Selector mechanism
- Dismantling and assembling up to 09.99 =>from Page 128
- Dismantling and assembling from 10.99 =>from Page 133

13 Hexagon bolt, 25 Nm

Protected by copyright. Copying for private or commercial purposes, in part or in whole, is not permitted unless authorised by Volkswagen AG. Volkswagen AG does not guarantee or accept any liability with respect to the correctness of information in this document. Copyright by Volkswagen AG.
satelettronica

5.6 - Removing and installing input shaft, output shaft (pinion shaft), differential and selector forks

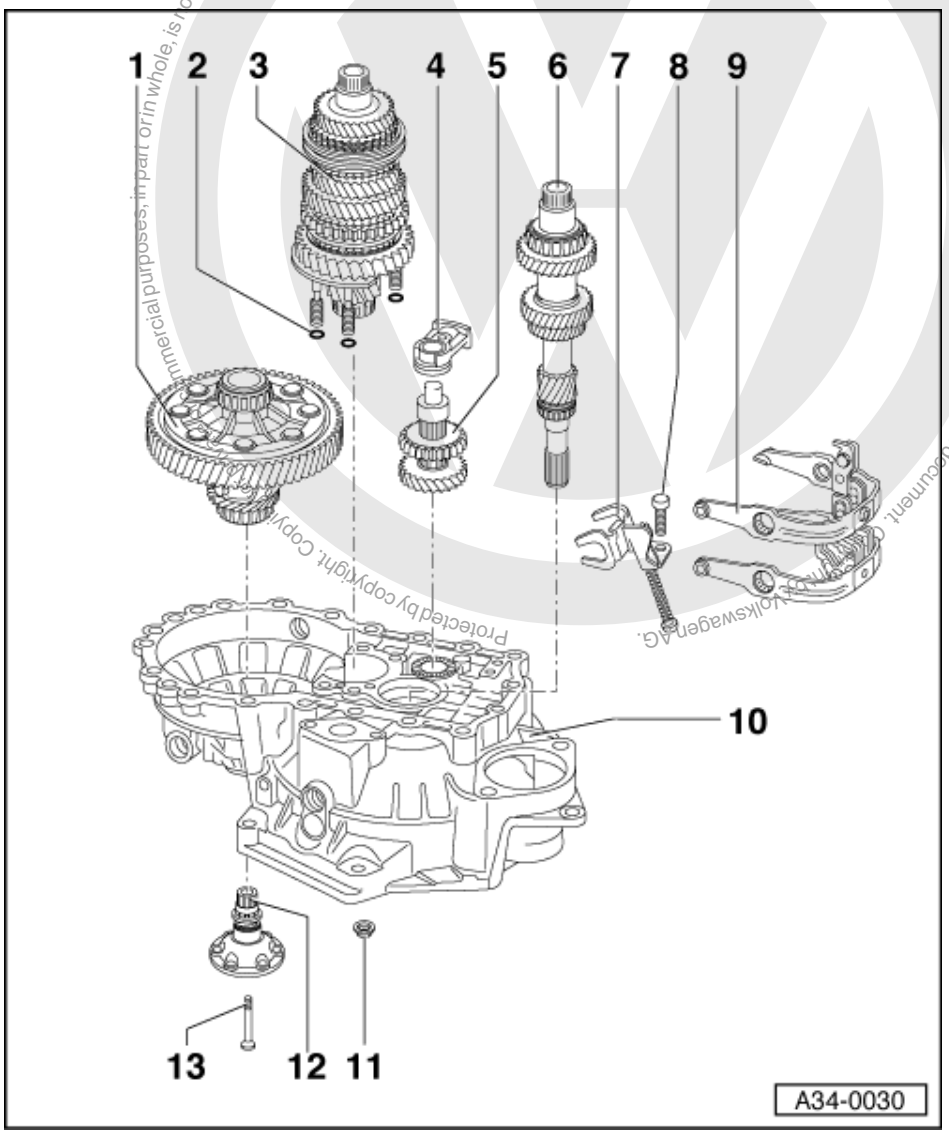

1 Differential
- Dismantling and assembling => page 206

2 Oil seal
- Qty. 4
- Always renew

3 Output shaft
- Dismantling and assembling => Page 165

4 Reverse shaft support
- Dismantling and assembling => Page 200

Protected by copyright. Copyright by Volkswagen AG.
Commercial purposes, in part or in whole, is not permitted unless authorised by Volkswagen AG. Volkswagen AG does not guarantee or accept any liability with respect to the correctness of information in this document.
satelettronica

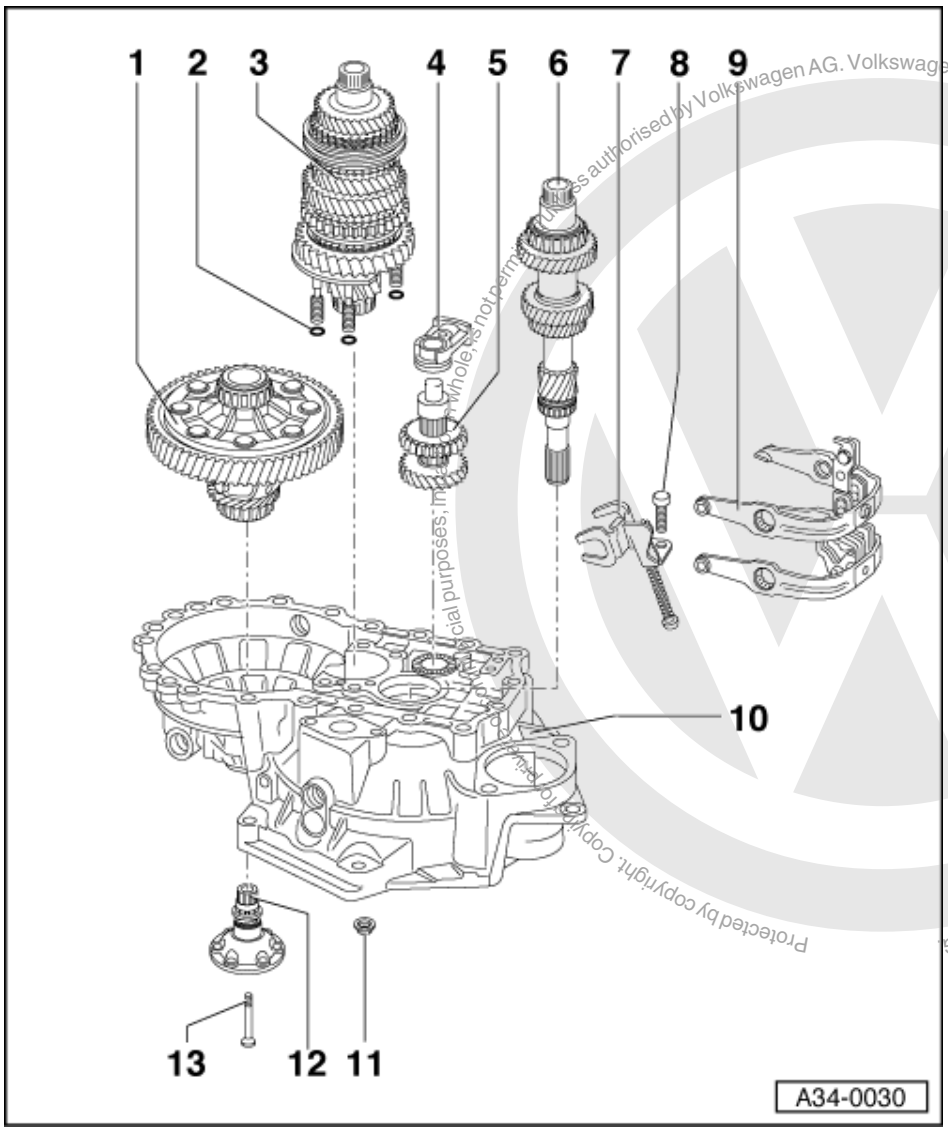

5 Reverse shaft
- Dismantling and assembling => Page 198

6 Input shaft
- Dismantling and assembling => page 146

7 Reverse gear selector fork
- Dismantling and assembling => Page 139
- Installation position => Page 109

8 Torx socket head bolt, 25 Nm

9 Selector mechanism
- (Selector forks)
- Dismantling and assembling => Page 139

10 Clutch housing
- Servicing => Page 118

Protected by copyright. Copying for private or commercial purposes, in whole or in part, is not permitted unless authorised by Volkswagen AG. Volkswagen AG does not guarantee or accept any liability with respect to the correctness of information in this document. Copyright by Volkswagen AG.
satelettronica

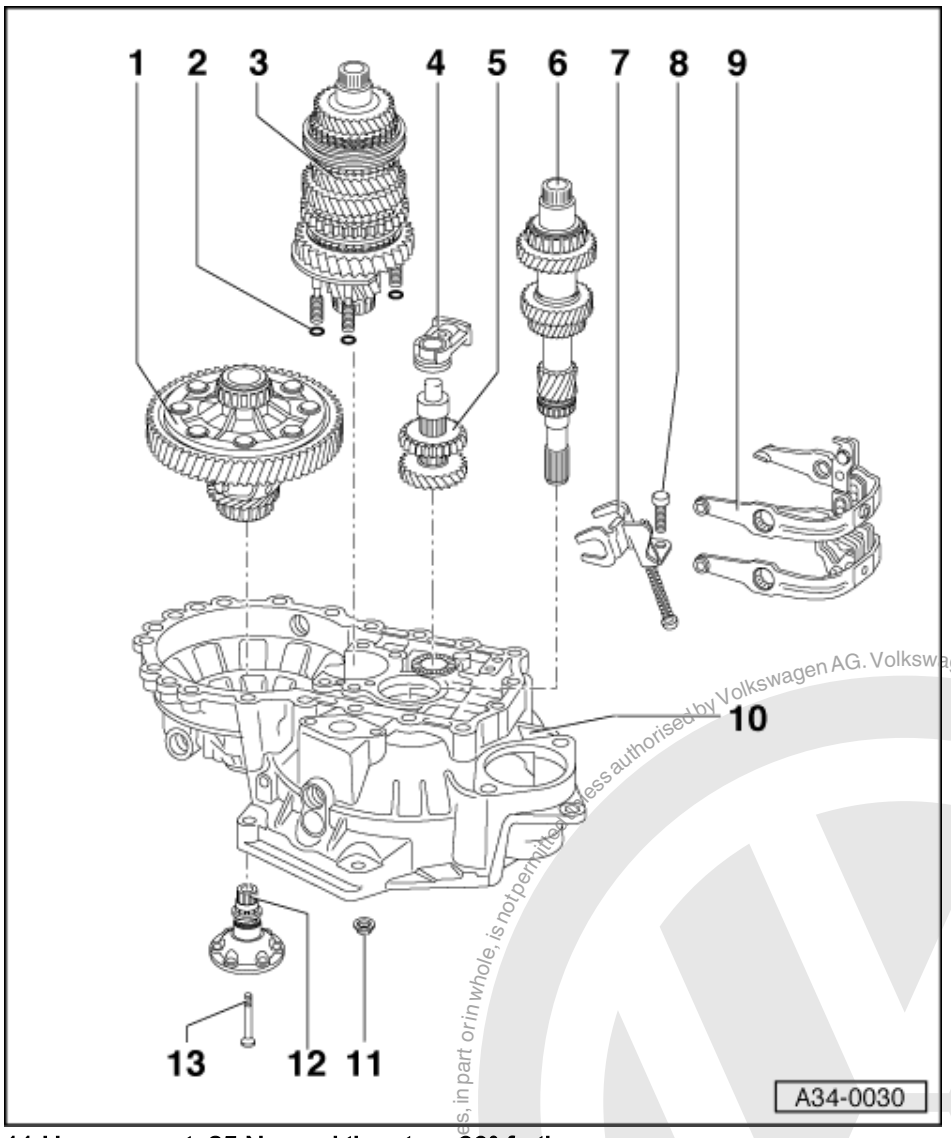

11 Hexagon nut, 25 Nm and then turn 90° further
- 4 nuts for bearing support

12 Flange shaft with spring
- Removing and installing => Page 104
- Assembling=> from page 206

13 Cone head bolt, 25 Nm

Protected by copyright. Copying for private or commercial purposes, in part or in whole, is not permitted unless authorised by Volkswagen AG. Volkswagen AG does not guarantee or accept any liability with respect to the correctness of information in this document. Copyright by Volkswagen AG.
satelettronica

5.7 - Assembly sequence

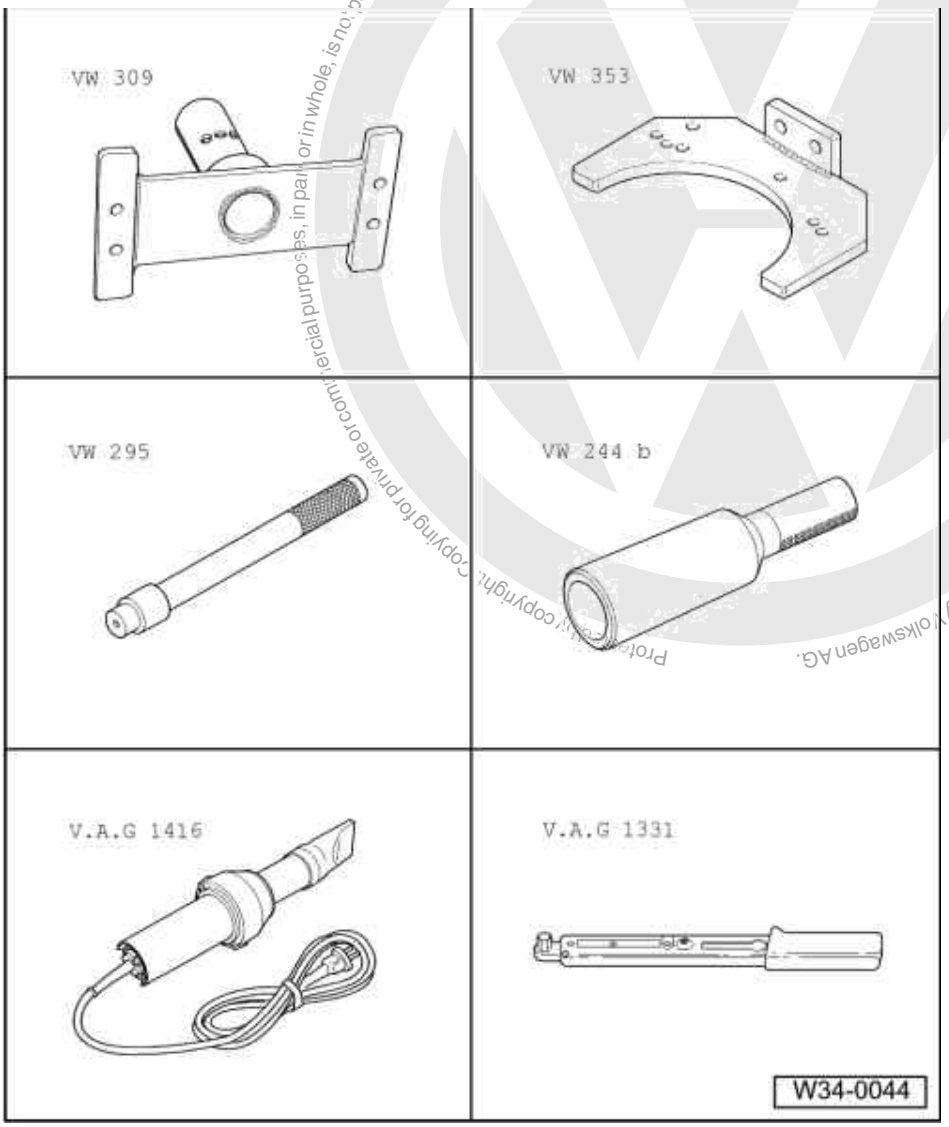

Dismantling and assembling gearbox housing cover, gearbox housing, selector mechanism, input shaft, output shaft (pinion shaft), differential and selector forks

Special tools and workshop equipment required

- VW 309 Holding plate
- VW 353 Gearbox support
- VW 295 Drift
- VW 244 B Fitting sleeve
- V. A. G. 1416 Hot air blower
- V.A.G 1331 Torque wrench
- Studs M 8 x 100 mm

Protected by copyright. Copying for private or commercial purposes, in part or in whole, is not permitted unless authorised by Volkswagen AG. Volkswagen AG does not guarantee or accept any liability with respect to the correctness of information in this document. Copyright by Volkswagen AG.
satelettronica

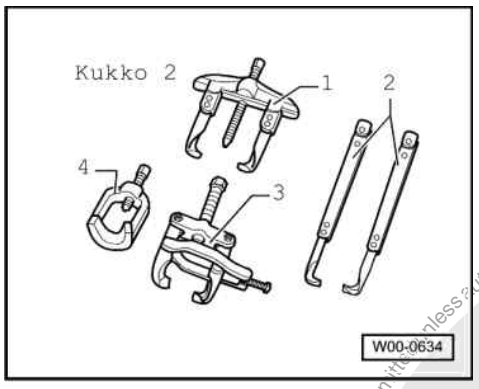

Special tools and workshop equipment required

- 1 - Two-arm puller Kukko 20/10

with Matra V170 hooks

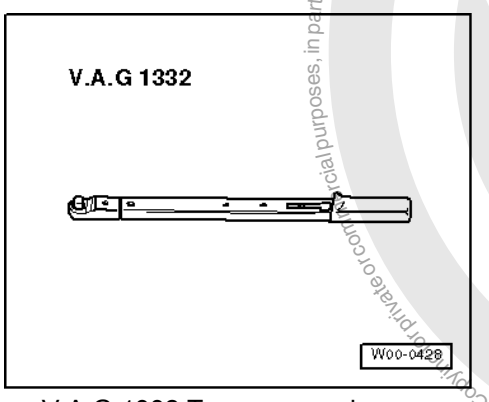

- V.A.G 1332 Torque wrench

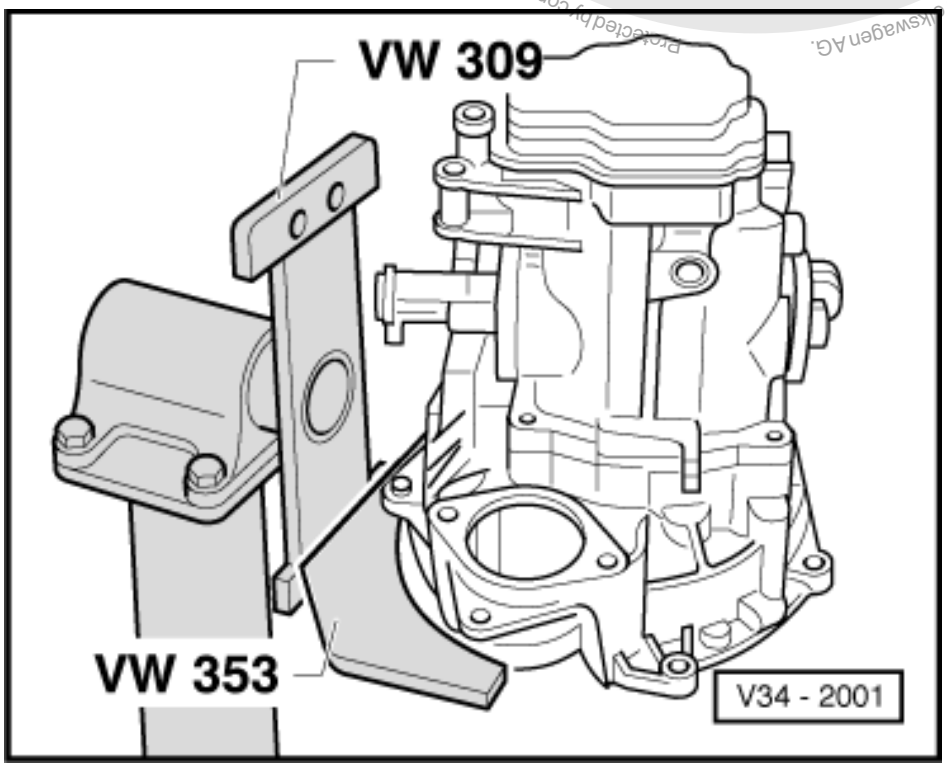

Protected by copyright. Copyright by Volkswagen AG.
Copyright by Volkswagen AG. Volkswagen AG does not guarantee or accept any liability with respect to the correctness of information in this document.
Copying for private or commercial purposes, in part or in whole, is not permitted unless authorised by Volkswagen AG.
satelettronica

Dismantling

- -> Mount gearbox on repair stand.
- Drain gearbox oil.

- Remove clutch release lever and release bearing => Page 28 .

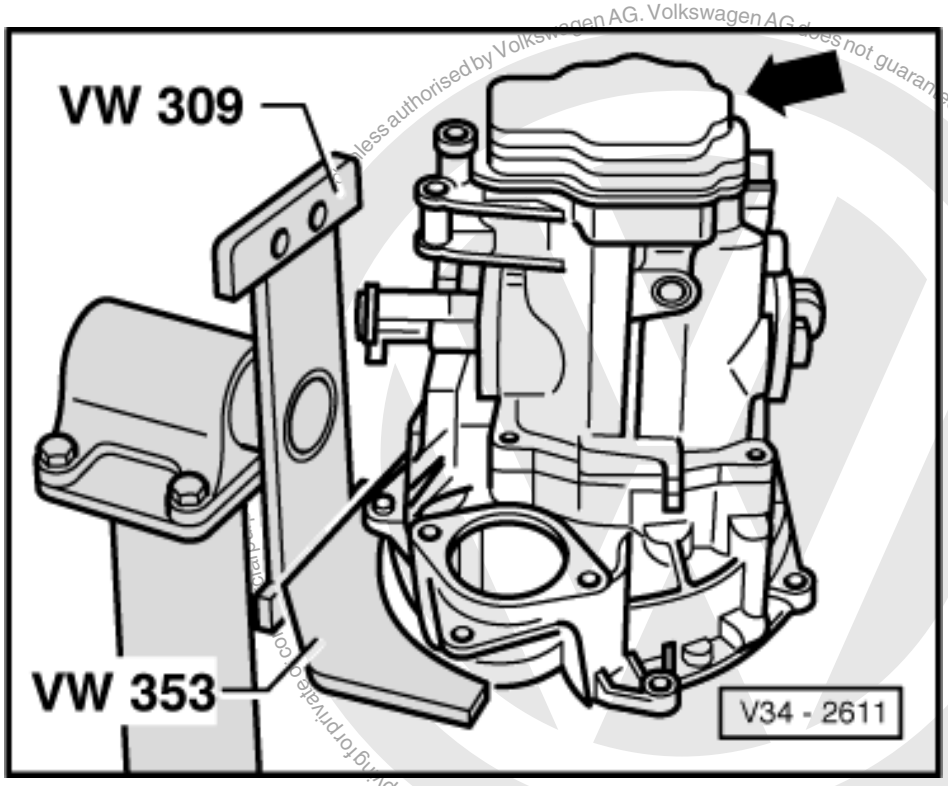

- Remove guide sleeve => Page 28 .
- -> Remove gearbox housing cover (arrow).

Protected by copyright. Copying for private or commercial purposes, in part or in whole, is not permitted unless authorised by Volkswagen AG. Volkswagen AG does not guarantee or accept any liability with respect to the correctness of information in this document. Copyright by Volkswagen AG.

satelettronica

- -> Remove 5th gear selector fork (arrows)
- Remove spring and locking pieces from locking collar.
- Pull off 5th gear selector fork with locking collar.
- Then place locking collar without selector fork onto synchro hub.

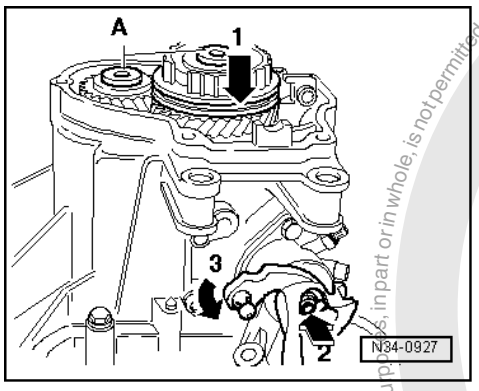

- -> Remove bolts -A- for synchro-hub and 5th gear, to do this select 5th (arrow 1) and 1st gear (arrows 2 and 3).
- After engaging both gears the input shaft and output shaft are locked, synchro-hub and gear wheel cannot turn. Both bolts can now be loosened.

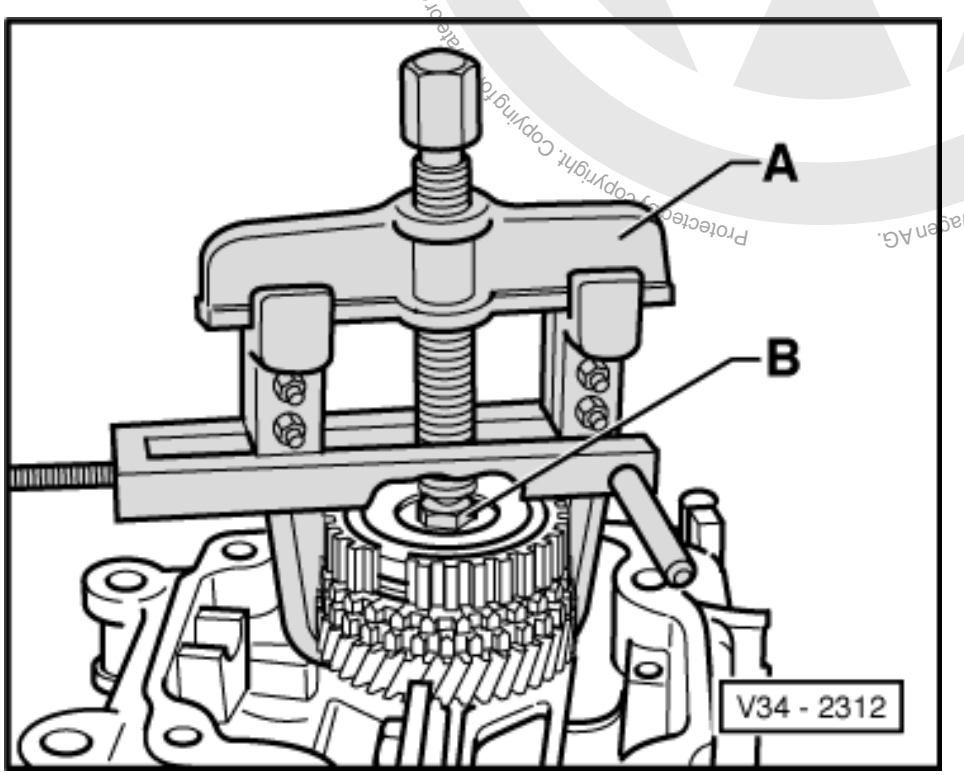

- -> Pull off synchro-hub and 5th gear wheel and remove together with needle roller bearing.

A - Two arm puller e.g. Kukko 20/10 with Matra V/170 hooks.
B - Hexagon bolt M10 x 20

Protected by copyright. Copying for private or commercial purposes, in part or in whole, is not permitted unless authorised by Volkswagen AG. Volkswagen AG does not guarantee or accept any liability with respect to the correctness of information in this document. Copyright by Volkswagen AG.
satelettronica

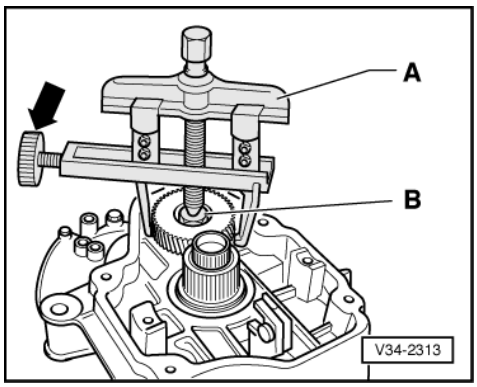

- -> Pull off 5th gear

A - Two arm puller e.g. Kukko 20/10 with Matra V/170 hooks.
B - Hexagon bolt M10 x 20
Removal sequence:
- Assemble two arm puller and centralize by turning screw (arrow).
- Pull gear wheel off with two arm puller, first heat with hot air blower V.A.G 1416 if necessary.

Note:

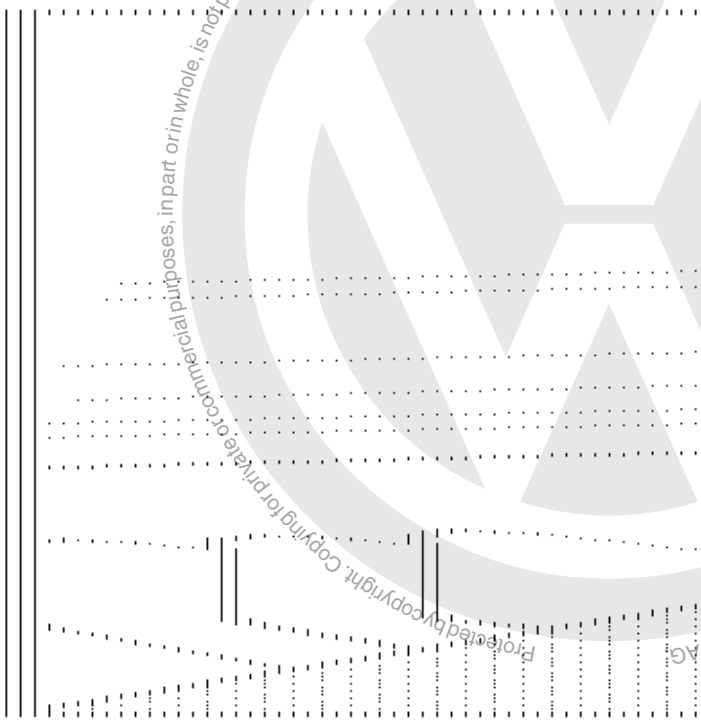

When pulling off the gear wheel ensure that the hooks do not bend outwards, if necessary tighten screw (arrow). After 5th gear wheel has been removed check for damage.

- -> Remove both flange shafts.
- Take out flanged shafts along with springs, thrust washers and tapered rings.

Protected by copyright. Copying for private or commercial purposes, in part or in whole, is not permitted unless authorised by Volkswagen AG. Volkswagen AG does not guarantee or accept any liability with respect to the correctness of information in this document. Copyright by Volkswagen AG
satelettronica

- -> Remove both reverse shaft support bracket bolts (arrows).

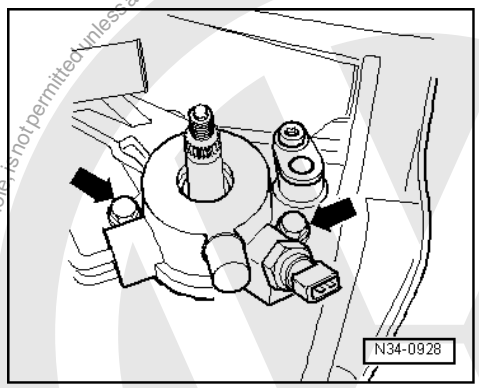

- -> Remove selector shaft with selector mechanism cover, to do this place selector shaft in neutral position. Then remove bolts -arrows- and pull selector shaft out of the gearbox housing.

Protected by copyright. Copyright for private or commercial purposes, in part or in whole, is not permitted unless authorised by Volkswagen AG. Volkswagen AG does not guarantee or accept any liability with respect to the correctness of information in this document. Copyright by Volkswagen AG.
satelettronica

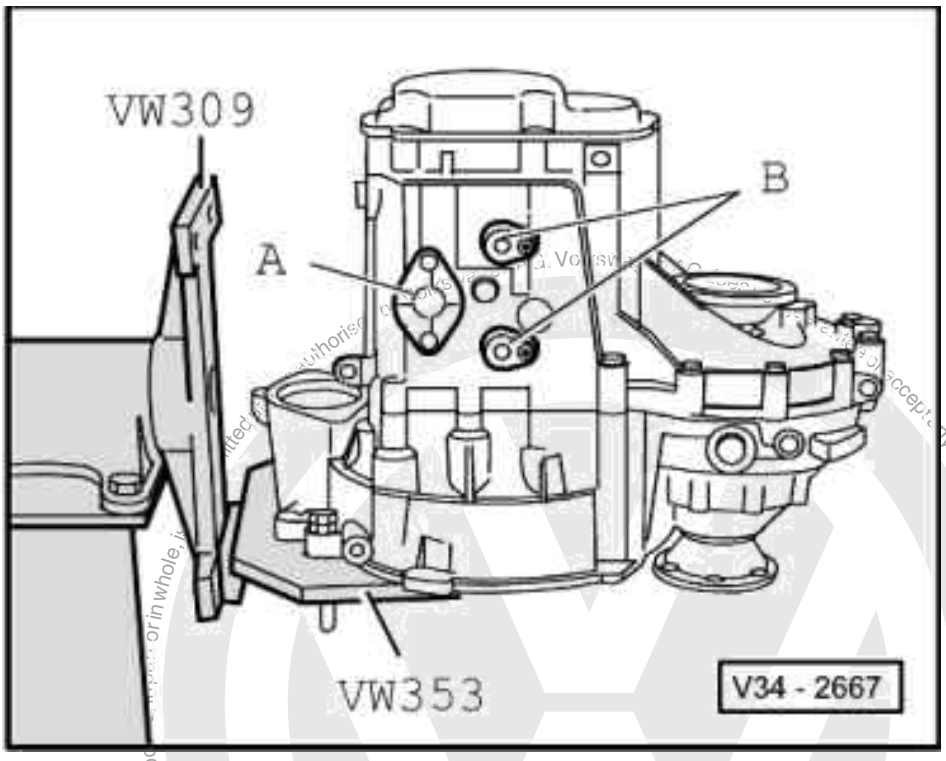

- -> Remove cover plate -A- and pivot pins -B- from underside of gearbox.

- -> Remove pivot pins -A- on top side of gearbox and gearbox housing to clutch housing securing bolts -B- in area of differential.

satelettronica

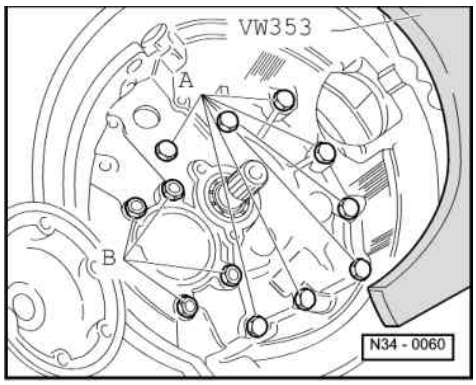

- -> Remove bolts -A-, from inside clutch housing for securing clutch housing to gearbox housing.

Note:

Do not remove nuts -B- for output shaft bearing support.

- -> Take-off gearbox housing, if necessary carefully lever up all round and alternating between sides on the protruding housing flange (arrows), being careful not to damage sealing surfaces.

Protected by copyright. Copying for private or commercial purposes, in part or in whole, is not permitted unless authorised by Volkswagen AG. Volkswagen AG does not guarantee or accept any liability with respect to the correctness of information in this document. Copyright by Volkswagen AG.
satelettronica

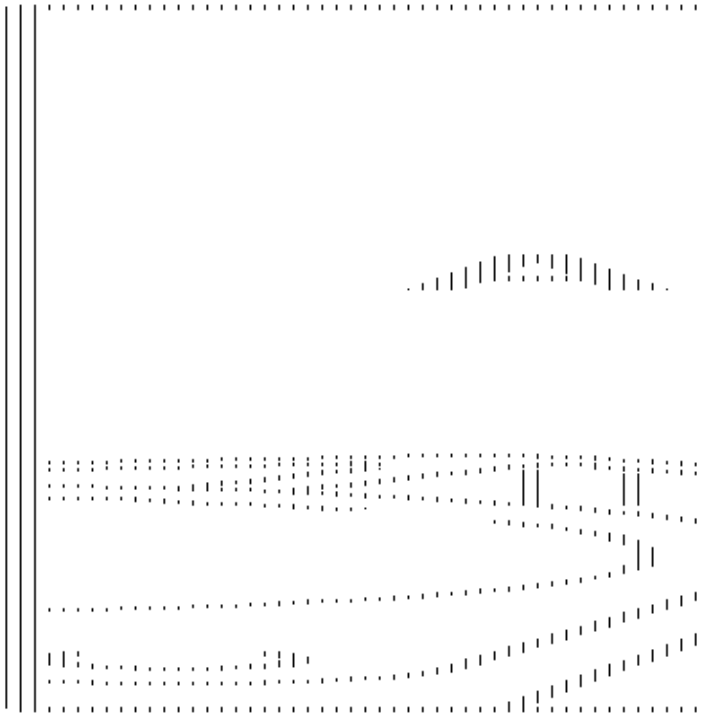

- -> Remove selector forks -A- together with selector plates.
- Unscrew bolt for selector mechanism for reverse gear -B-.

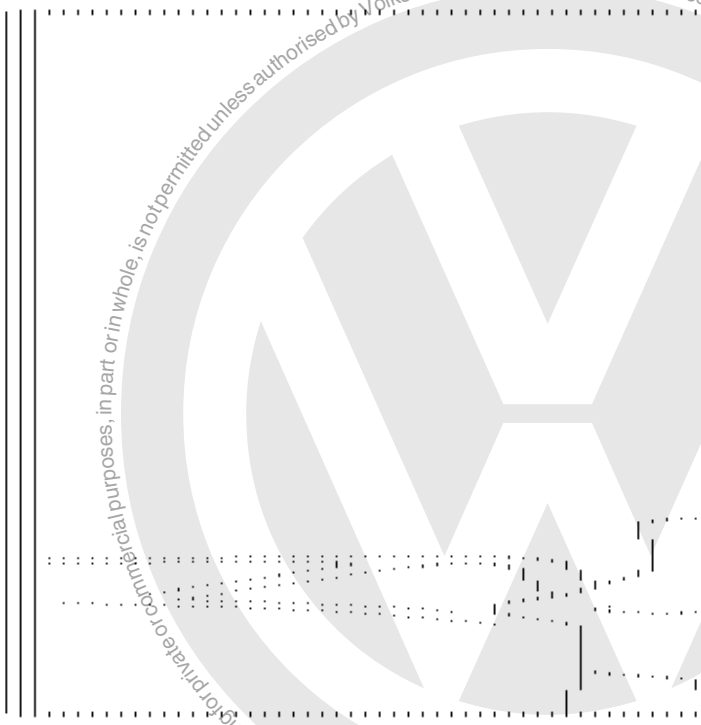

- Remove nuts for output shaft bearing support (=>Item -B-, Illustration N34-0060, Page 107)
- -> Remove reverse gear -A-, input shaft -B- and output shaft -C- one after the other from clutch housing.
- Take out differential.

Protected by copyright. Copying for private or commercial purposes, in part or in whole, is not permitted unless authorised by Volkswagen AG. Volkswagen AG does not guarantee or accept any liability with respect to the correctness of information in this document. Copyright by Volkswagen AG.

satelettronica

Assembling

- Install differential.

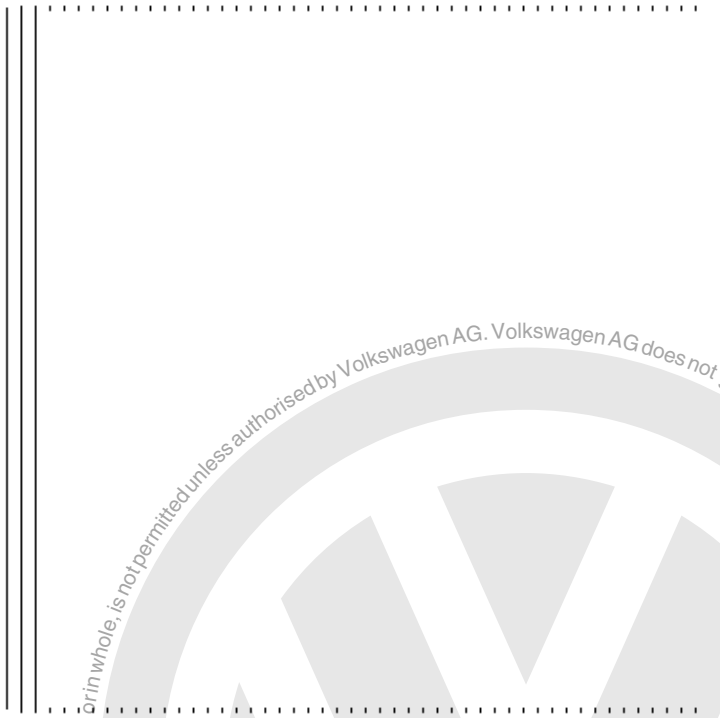

- -> Always renew sealing rings (arrows) for output shaft bearing support.

Note:

The illustration only shows 3 of the 4 sealing rings.

- Install input shaft, output shaft and reverse shaft together.
- Tighten nuts for output shaft bearing support.
- Clean locking fluid remnants from threads in the reverse shaft support (arrow Illustration V34-2293, Page 111). The remnants can be removed using a tap.

Protected by copyright. Copying for private or commercial purposes, in part or in whole, is not permitted unless authorised by Volkswagen AG. Volkswagen AG does not guarantee or accept any liability with respect to the correctness of information in this document. Copyright by Volkswagen AG.

satelettronica

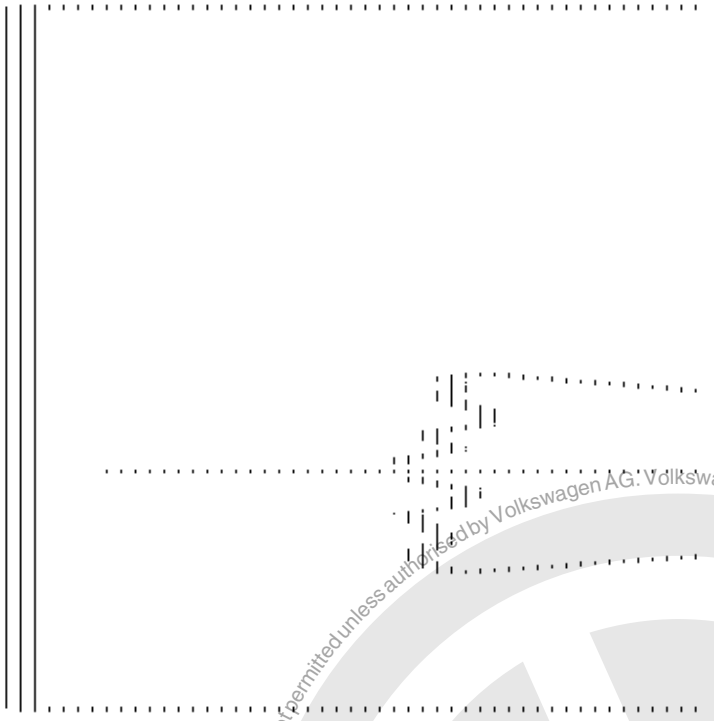

- Install reverse shaft support.
- Install reverse gear selector mechanism.

-> Installation position reverse gear

- Install selector forks together with selector plates.

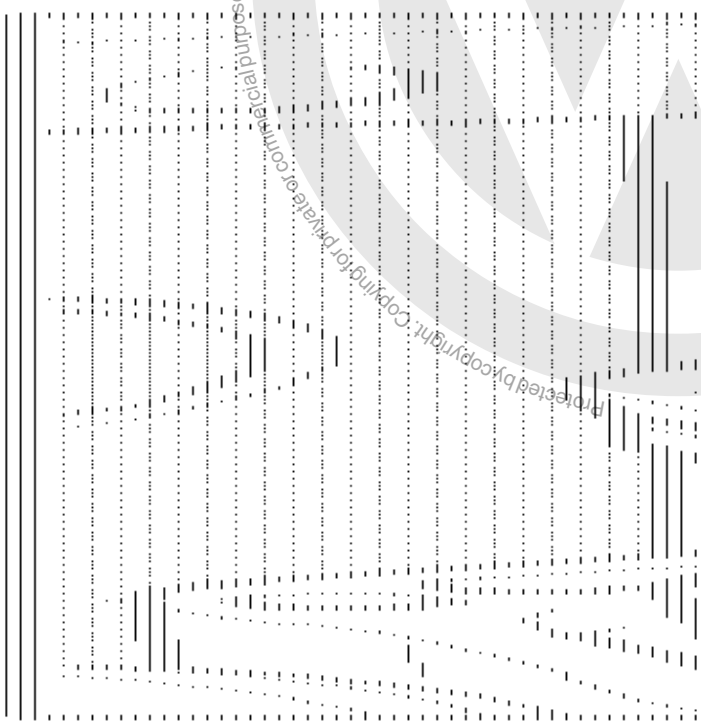

- -> Screw M 8 x 100 mm studs -A- into reverse shaft support so that the shaft is aligned after fitting gearbox housing.

Protected by copyright. Copying for private or commercial purposes, in part or in whole, is not permitted unless authorised by Volkswagen AG. Volkswagen AG does not guarantee or accept any liability with respect to the correctness of information in this document. Copyright by Volkswagen AG.
satelettronica

- Align selector plates.

Note:

The selector segments must be positioned in the grooves on the locking collars.

- Fit gearbox housing.

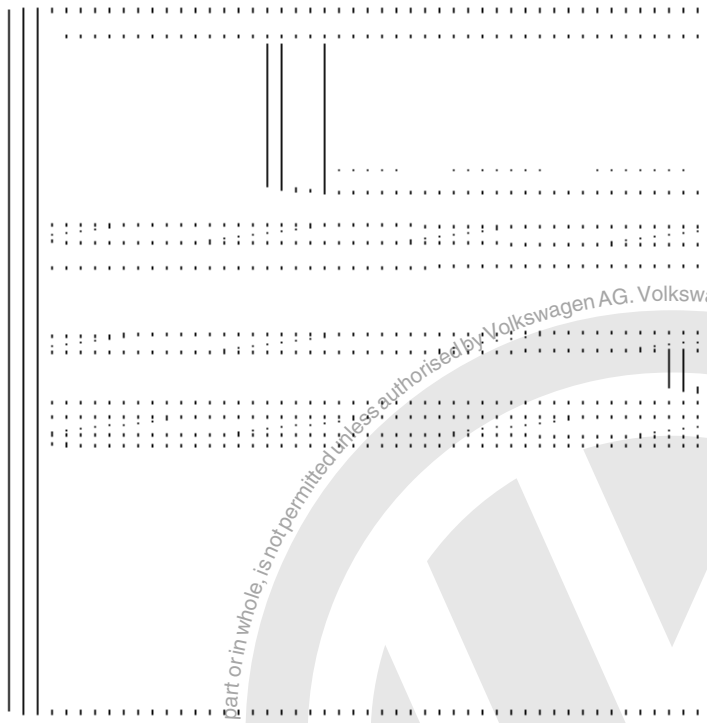

Install reverse shaft support bolts (arrow) as follows:

- -> Insert bolt -a-, remove stud (=> Illustration V34-2008), insert bolt -b- and hand tighten.

  Tightening sequence:
  1 - Bolt -a- 30 Nm
  2 - Bolt -b- 30 Nm

Protected by copyright. Copying for private or commercial purposes, in part or in whole, is not permitted unless authorised by Volkswagen AG. Volkswagen AG does not guarantee or accept any liability with respect to the correctness of information in this document. Copyright by Volkswagen AG.
satelettronica

Protected by copyright. Copying for private or commercial purposes, in part or in whole, is not permitted unless authorised by Volkswagen AG. Volkswagen AG does not guarantee or accept any liability with respect to the correctness of information in this document. Copyright by Volkswagen AG.

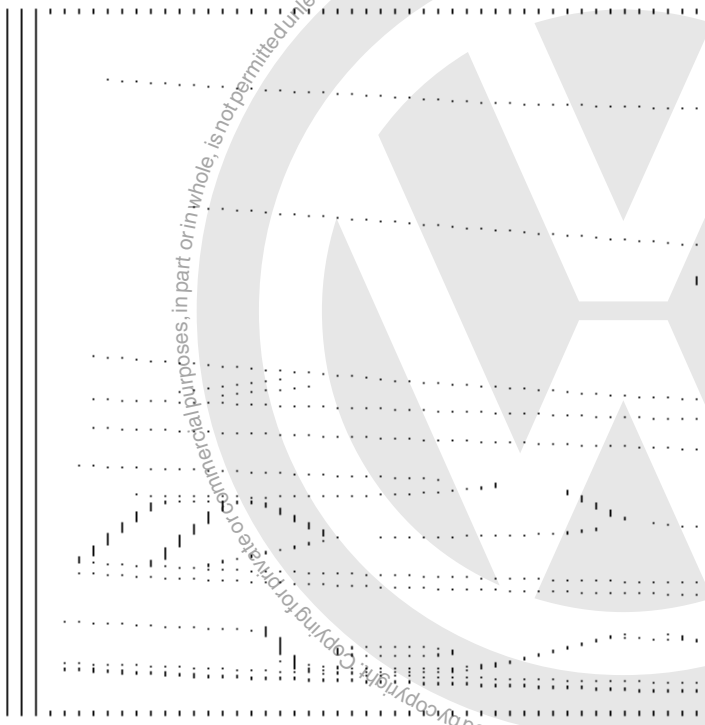

- -> Install pivot pin (arrow) for selector forks. To do this align selector mechanism with a screwdriver, so that the relevant pivot pin can be installed.
- Fit selector shaft cover

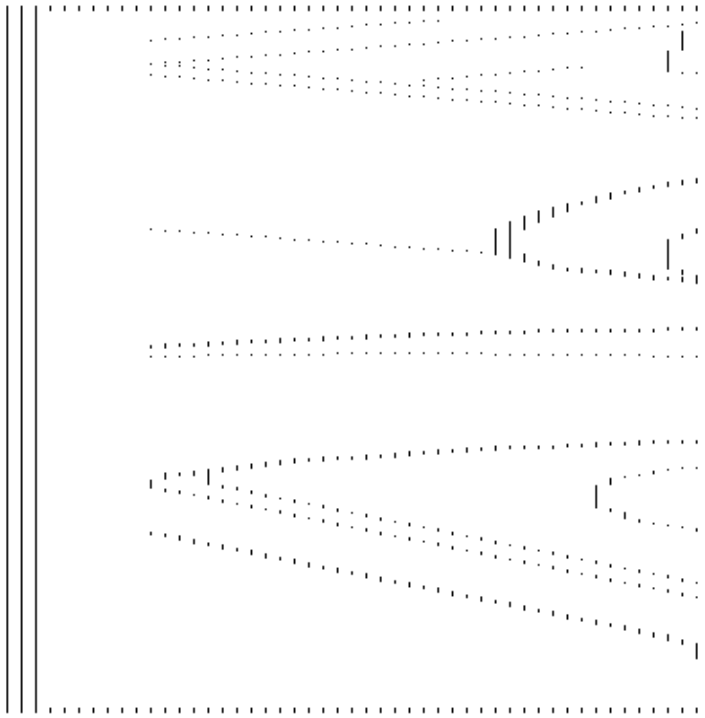

-> Install selector shaft as follows:

- Place selector plates in neutral.
- Locate lug (arrow 1) in the recess in gearbox housing. Position selector shaft so that selector finger (arrow 2) is inserted in the selector plates.

satelettronica

- Install selector shaft cover.

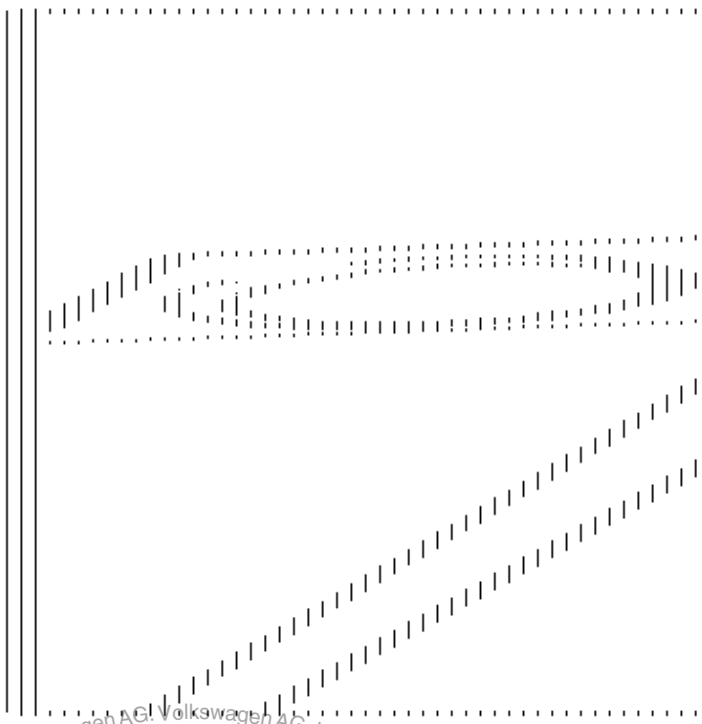

-> Installation position 5th gear wheel

The circumferential groove (arrow) faces to gearbox housing.

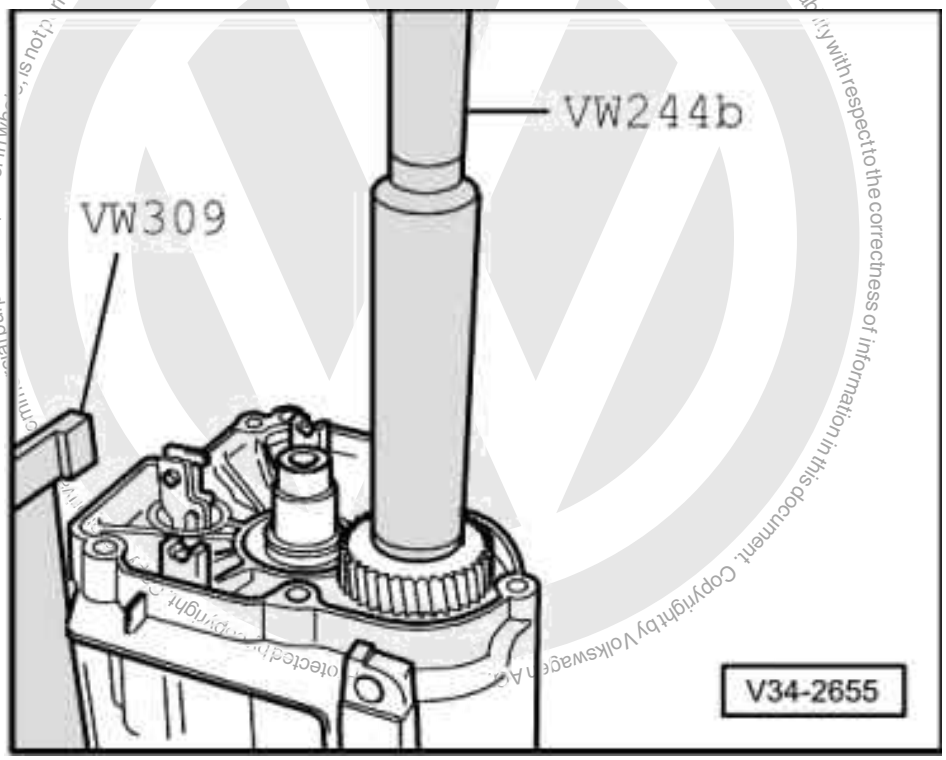

- -> Knock-on 5th gear.

satelettronica

Checking 5th gear synchro-ring

- -> Before installing 5th gear wheel and synchro-ring press the synchro-ring onto the cone of the gear wheel and measure gap -a- with a feeler gauge.

Gap -a-	New	Wear limit
5th gear	1.1 ... 1.7 mm	0.5 mm

- Install 5th gear wheel with needle roller bearing
- Place 5th gear synchro-ring on gear wheel
- Assembly 5th gear synchro-hub/locking collar before installing => Page 159 .

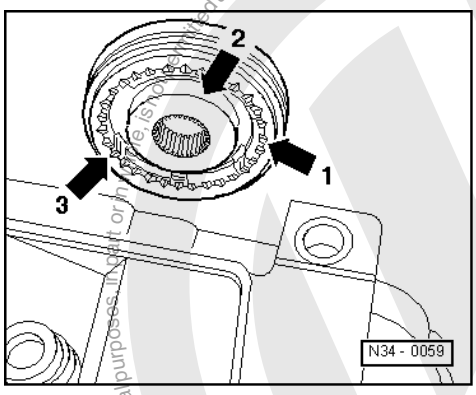

-> Installation position 5th gear synchro-hub/locking collar

The pointed teeth of the locking collar (arrow 1) and the high shoulder of the synchro-hub (arrow 2) face the gearbox housing.

satelettronica
Protected by copyright. Copying for private or commercial purposes, in part, or in the form of reproduction, is only permitted with the express consent of Volkswagen AG. Volkswagen AG does not guarantee or accept any liability with respect to the correctness of information in this document. Copyright by Volkswagen AG.

The syncro-hub mountings (arrow 3) align with the synchro-ring cast locking pieces (arrows on illustration N35-0018 => Page 115).

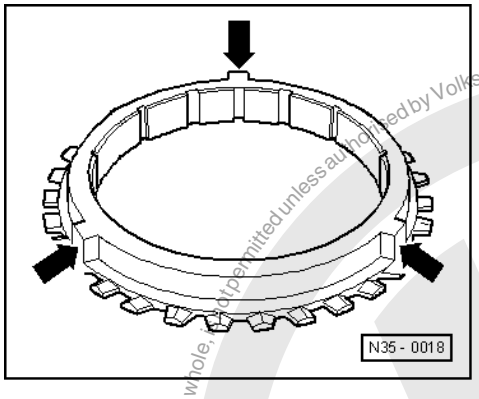

-> 5th gear synchro-ring with cast locking pieces (arrows)

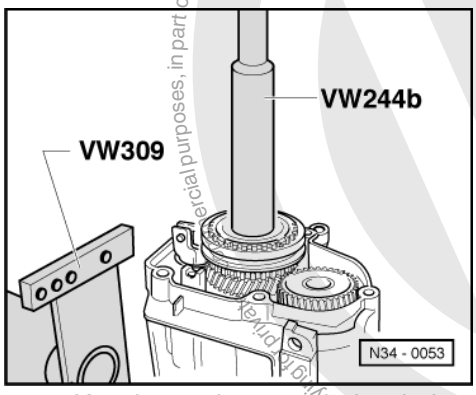

- -> Knock-on 5th gear synchro-hub

Note:

When driving on ensure synchro-ring is free to move.

Copyright by Volkswagen AG. Volkswagen AG does not guarantee or accept any liability with respect to the correctness of information in this document. Copyright by Volkswagen AG. Reproduced by copyright. Copyright by Volkswagen AG. Reproduced by copyright. Copyright by Volkswagen AG. Reproduced by copyright. Copyright by Volkswagen AG. Reproduced by copyright.
satelettronica

- Screw-in securing bolts for synchro-hub and 5th gear wheel.

-> Installation position of dished spring for gear wheel and 5th gear synchro-hub securing bolts:

The outer diameter (concave side -arrows-) faces 5th gear.

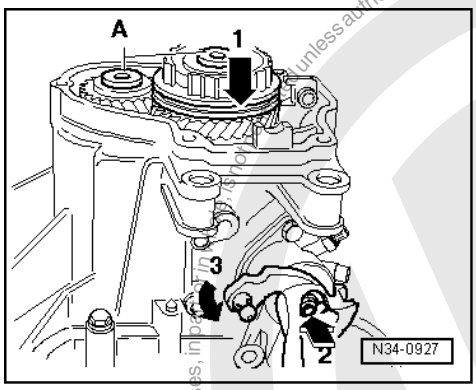

- -> Tighten bolts -A- for synchro-hub and 5th gear. To do this select 5th (arrow 1) and 1st gear (arrows 2 and 3).
- After engaging both gears the input shaft and output shaft are locked, synchro-hub and gear wheel cannot turn. Both bolts can now be tightened.
- Install 5th gear selector fork.

-> Adjusting 5th gear:

- Engage 5th gear. Loosen bolt -1-. Press locking collar and selector fork jaws in direction of arrow, then tighten bolt -1- to 25 Nm.

• Check measurement :

Protected by copyright. Copying for private or commercial purposes, in part or in whole, is not permitted unless authorised by Volkswagen AG. Volkswagen AG does not guarantee or accept any liability with respect to the correctness of information in this document. Copyright by Volkswagen AG.
satelettronica

It must not be possible to slide a 0.2 mm feeler gauge between locking collar and gear wheel. If necessary repeat adjustment.

- Disengage 5th gear. Locking collar must now be in the neutral position. Synchro-ring must move freely.
- Select all gears.
- Fit gearbox housing cover

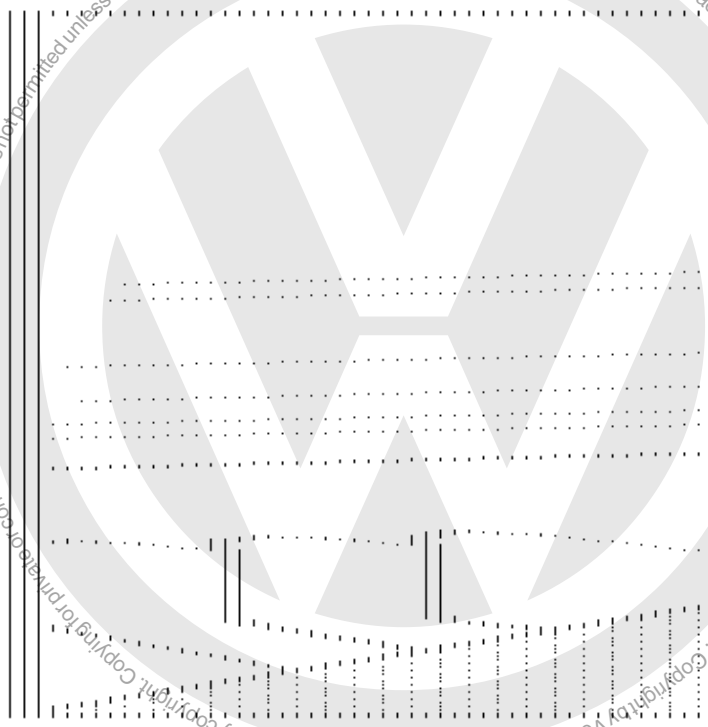

- -> Install flanged shafts along with springs, thrust washers and tapered rings.
- Fit release bearing guide sleeve => Page 28 .
- Fit clutch release lever and release bearing => Page 28 .

Copyright by Volkswagen AG. Volkswagen AG does not guarantee or accept any liability with respect to the correctness of information in this document. Copyright by Volkswagen AG. Protected by copyright. Copying for private or commercial purposes, in part or in whole, is not permitted unless authorised by Volkswagen AG.

satelettronica

6 - Servicing gearbox housing and clutch housing

6.1 - Servicing gearbox housing and clutch housing

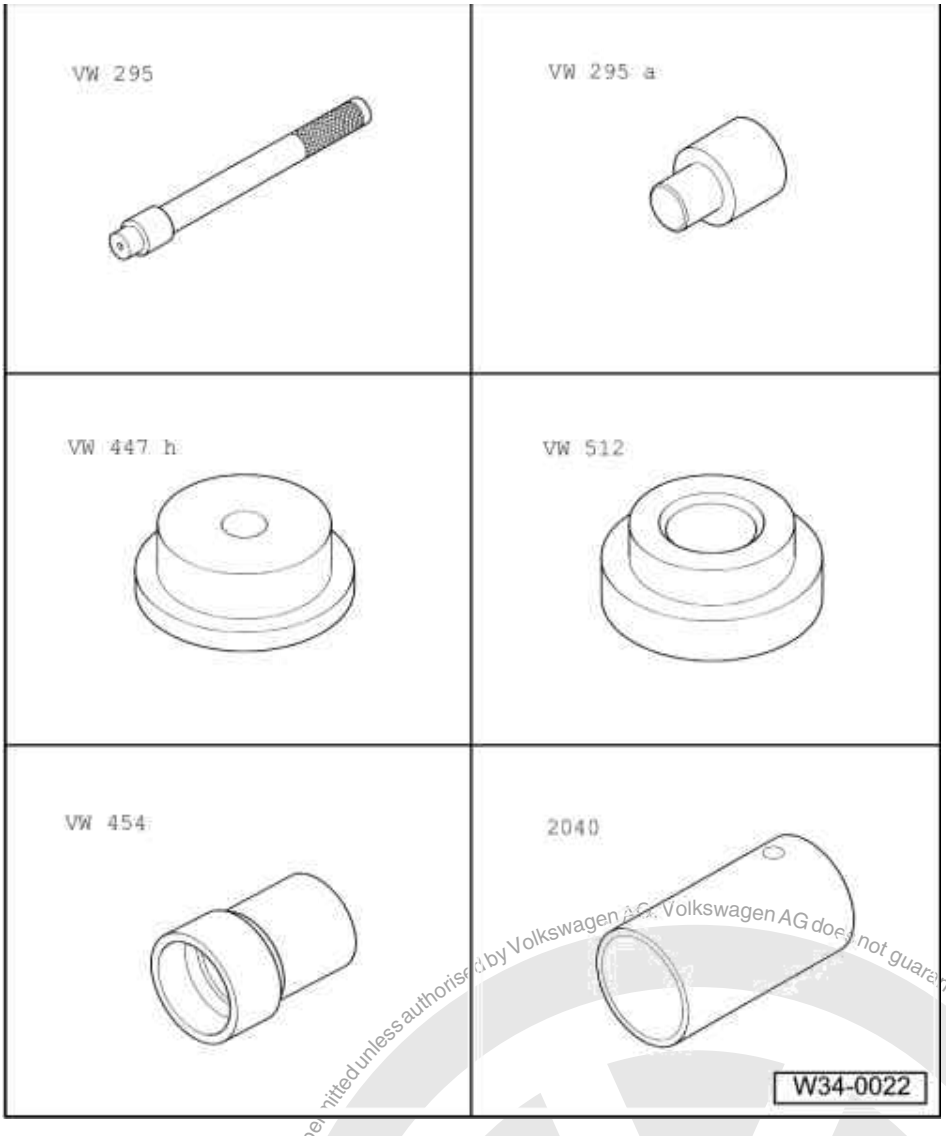

Special tools and workshop equipment required

- VW 295 Drift
- VW 295a Adapter
- VW 447 H Press plate
- VW 512 Press disk
- 2040 Tube
- VW 454 Press piece

Protected by copyright. Copying for private or commercial purposes, in part or in whole, is not permitted unless authorised by Volkswagen AG. Volkswagen AG does not guarantee or accept any liability with respect to the correctness of information in this document. Copyright by Volkswagen AG.
satelettronica

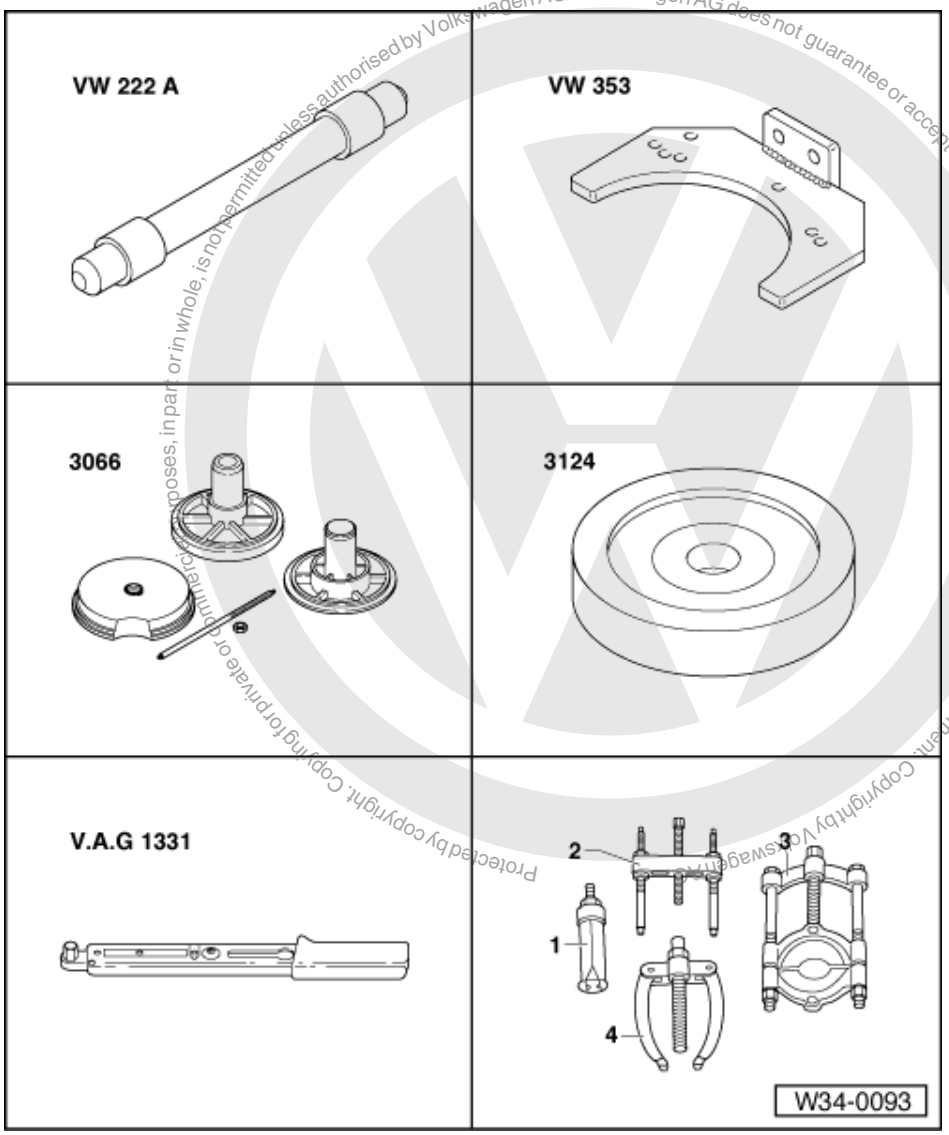

Copyright by Volkswagen AG. Volkswagen AG does not guarantee or accept any liability with respect to the correctness of information in this document. Copying for private or commercial purposes, in part or in whole, is not permitted unless authorised by Volkswagen AG. Protected by copyright.

satelettronica

Special tools and workshop equipment required

- VW 222 A Drift
- VW 353 Gearbox support
- 3066 Spindle from assembly tool
- 3124 Press piece
- V.A.G 1331 Torque wrench
- 1 - Kukko 21/1 Internal puller
- 4 - Kukko 22/1 Counter-support

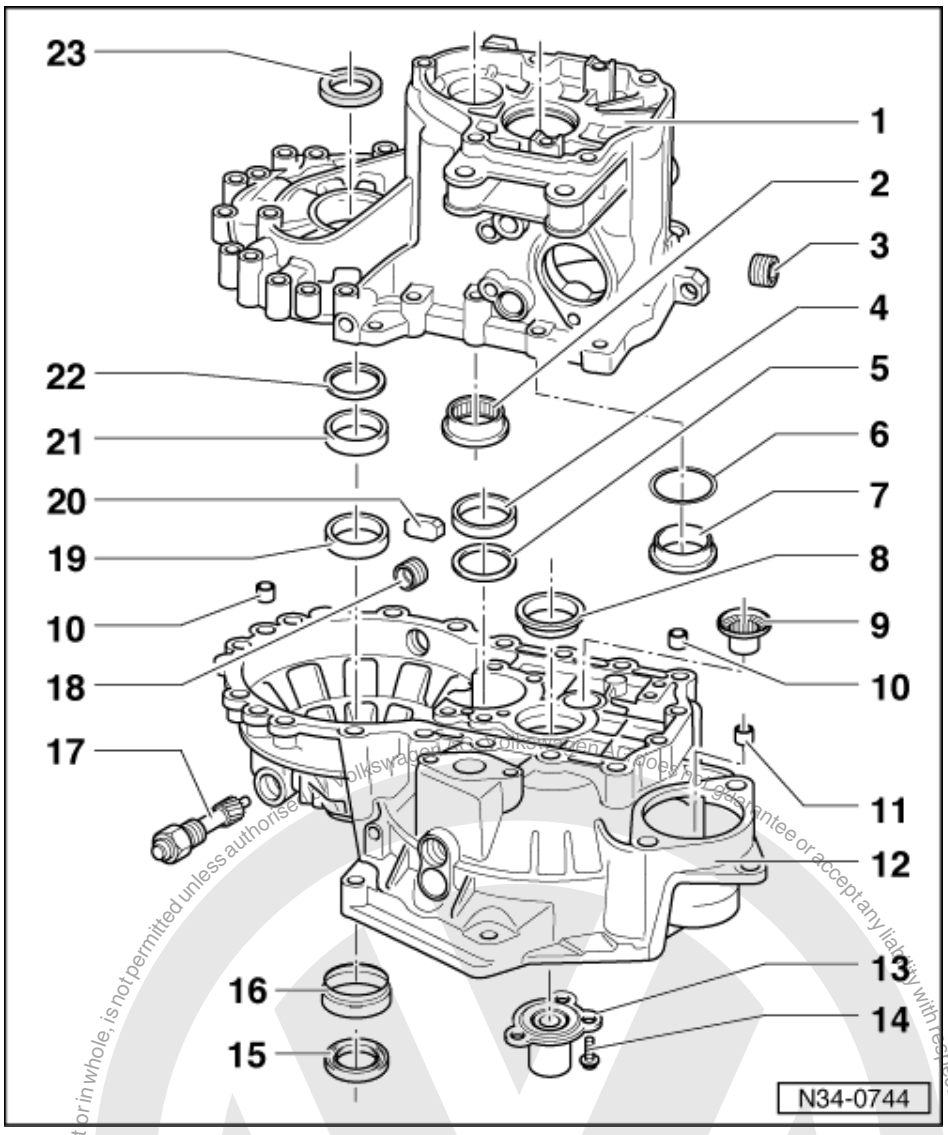

1 Gearbox housing
- If replaced: Adjust input shaft and differential => Page 220

2 Needle roller bearing
- For output shaft
- Removing => Fig. 1
- Installing and securing => Fig. 2

3 Oil filler plug, 25 Nm
- Without magnet

4 Outer race/taper roller bearing
- For output shaft
- Removing and installing => Page 177
- If replaced: Adjust output shaft => Page 195

5 Shim
- For output shaft
- Adjustment overview => Page 220

satelettronica

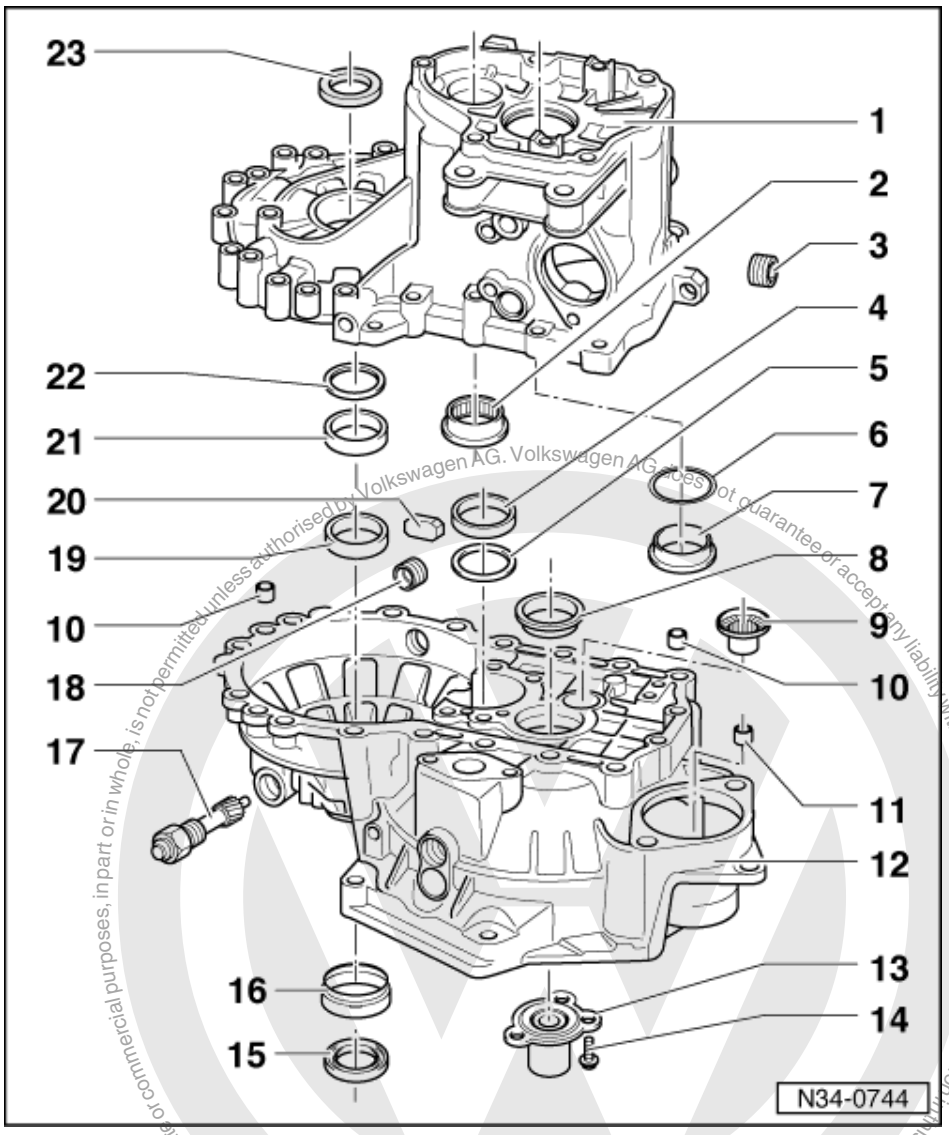

6 Shim
- For input shaft
- Adjustment overview
  => Page 220

7 Outer race/taper roller bearing
- For input shaft
- Removing and installing
  => Page 153
- If replaced: Adjust input shaft
  => Page 160

8 Outer race/taper roller bearing
- For input shaft
- Removing and installing
  => Page 157
- If replaced: Adjust input shaft
  => Page 160

9 Needle bearing
- Removing and installing
  => Page 201

Protected by copyright. Copyright by Volkswagen AG. Volkswagen AG does not guarantee or accept any liability with respect to the correctness of information in this document. Copyright by Volkswagen AG. Unless authorised by Volkswagen AG, is not permitted in whole or in part for commercial purposes, in part or in whole, is not permitted unless authorised by Volkswagen AG.
satelettronica

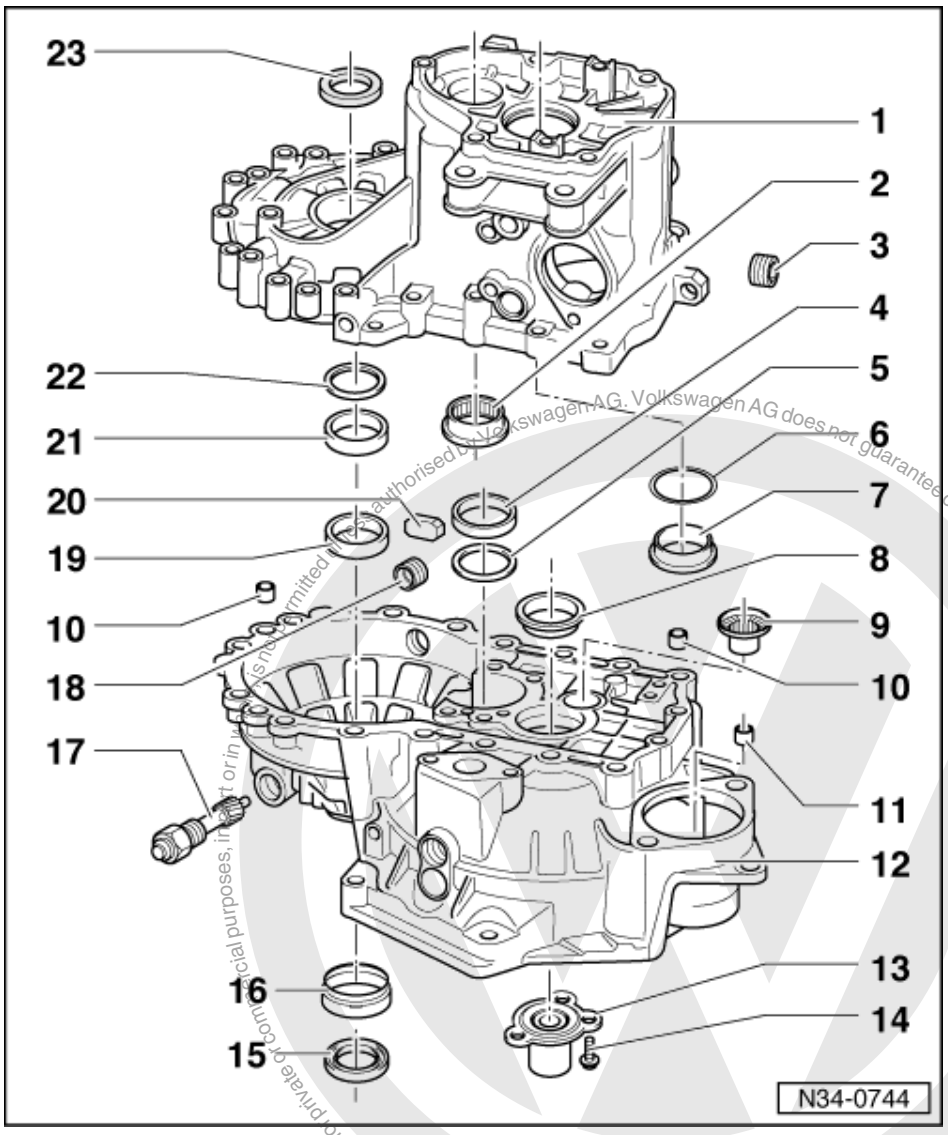

10 Dowel sleeve
- (Qty. 2)

11 Starter bush
- Pulling out => Fig. 5
- Knocking in => Fig. 6
- Can be replaced without removing gearbox

12 Clutch housing
- If replaced: =>Adjustment overview, Page 220

13 Guide sleeve
- With input shaft seal and a vulcanised O ring
- Knocking-out oil seal => Fig. 3
- Knocking-in oil seal => Fig. 4
- Remove guide sleeve to change the oil seal
- If damaged replace guide sleeve and O-ring together

Protected by copyright. Copying for private or commercial purposes, in part or in whole, is not permitted unless authorised by Volkswagen AG. Volkswagen AG does not guarantee or accept any liability with respect to the correctness of information in this document. Copyright by Volkswagen AG.
satelettronica

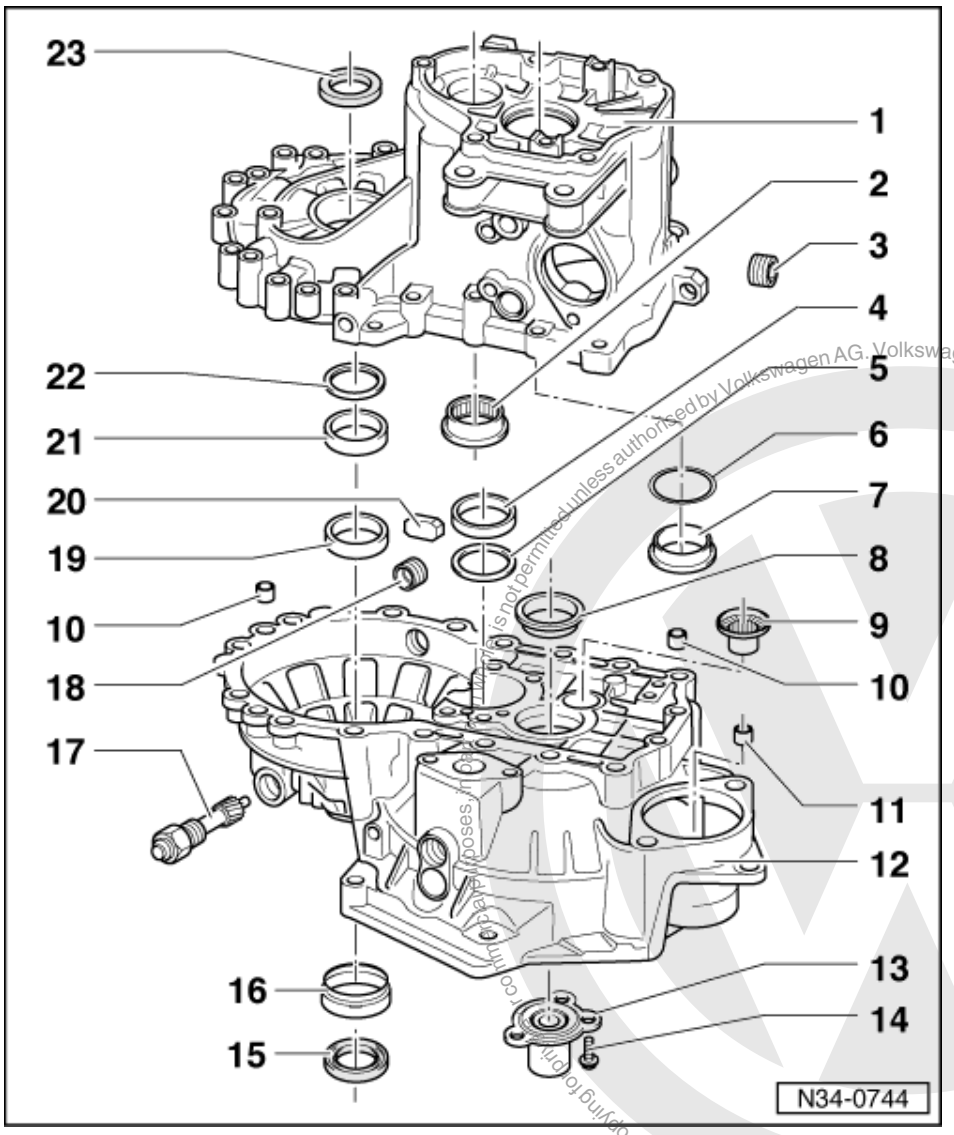

14 Socket head bolt, 20 Nm
- Self-locking
- Always renew

15 Oil seal
- Renewing => Page 203

16 Sleeve
- For oil seal (Item 15)
- Removing => Fig. 7
- Installing => Fig. 8

17 Speedometer drive, 30 Nm

18 Oil drain plug, 25 Nm
- Without magnet

19 Outer race/taper roller bearing
- For differential
- Pressing in and out => Page 206
- If replaced: Adjust differential => page 221

Protected by copyright. Copying for private or commercial purposes, in part or in whole, is not permitted unless authorised by Volkswagen AG. Volkswagen AG does not guarantee or accept any liability with respect to the correctness of information in this document. Copyright by Volkswagen AG.
satelettronica

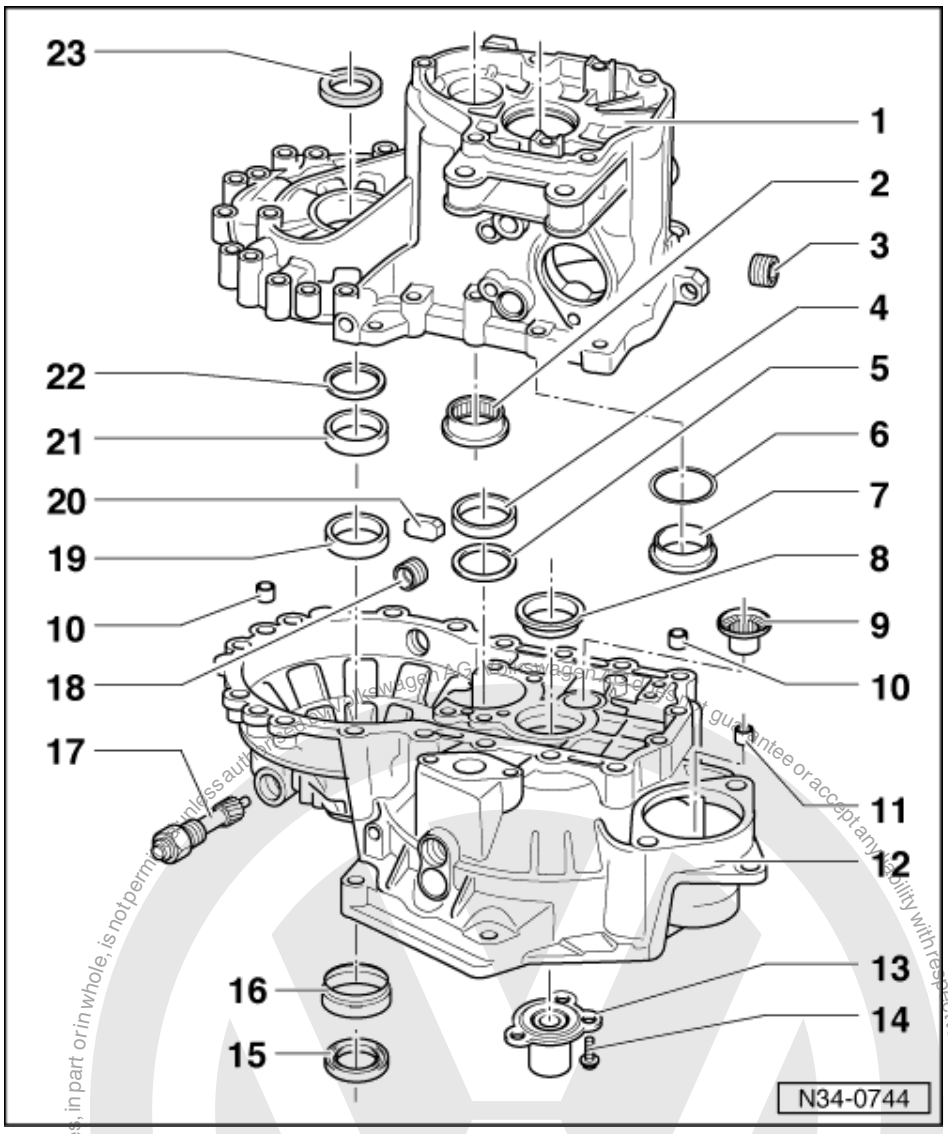

20 Magnet
- Held in place by housing joint surface

21 Outer race/taper roller bearing
- For differential
- Pressing in and out
  => Page 206
- If replaced: Adjust differential
  => page 221

22 Shim
- For differential
- Adjustment overview
  => Page 220

23 Oil seal
- Renewing => Page 203

Protected by copyright. Copyright by Volkswagen AG.
Copyright by Volkswagen AG, Wolfsburg. It is not to be republished in whole or in part, in any form or medium, without the express written permission of Volkswagen AG. Volkswagen AG does not guarantee or accept any responsibility with respect to the correctness of information in this document.
satelettronica

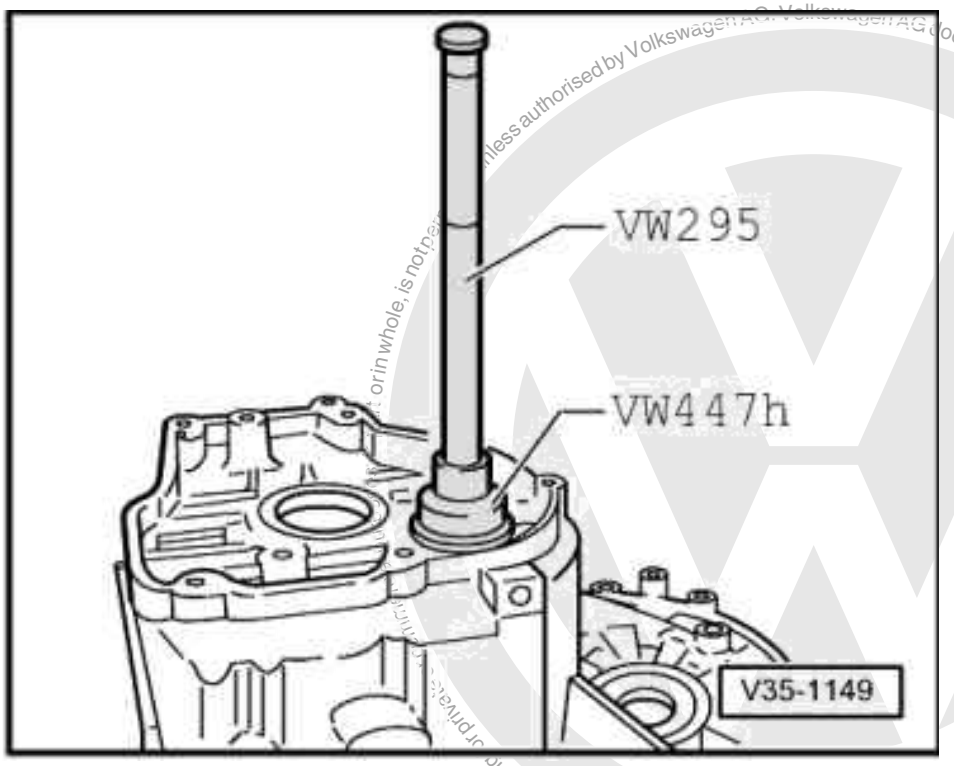

-> Fig.1 Knocking-out needle roller bearing.

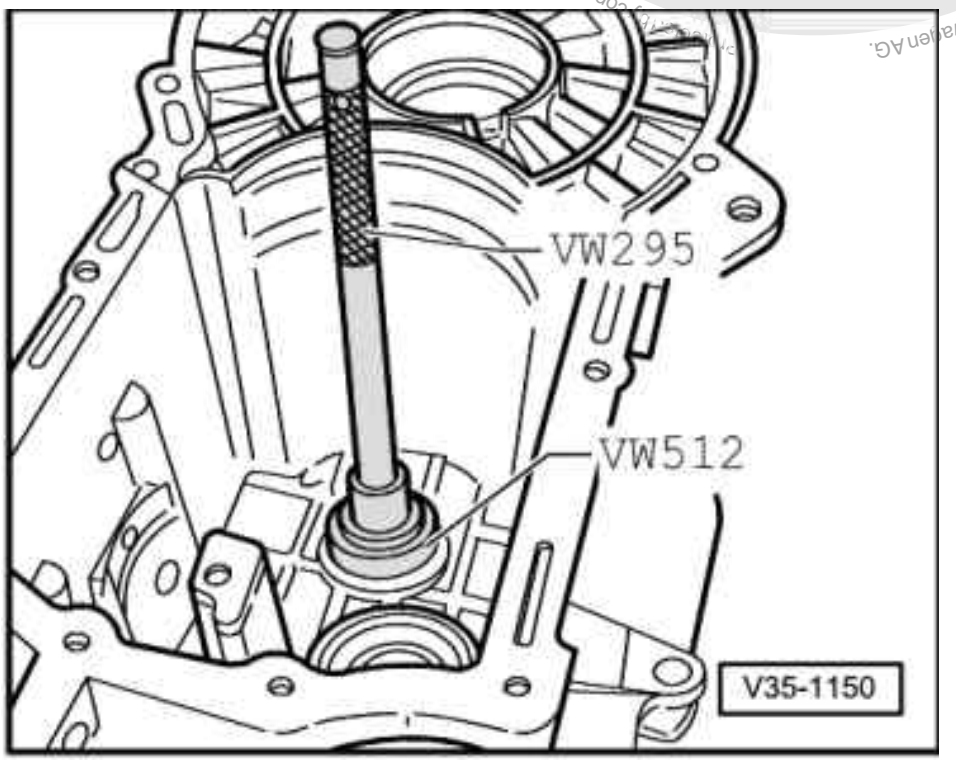

-> Fig.2 Knocking needle roller bearing in onto stop

- Secure needle roller bearing in gearbox housing at three points (120° offset) with a punch.

satelettronica

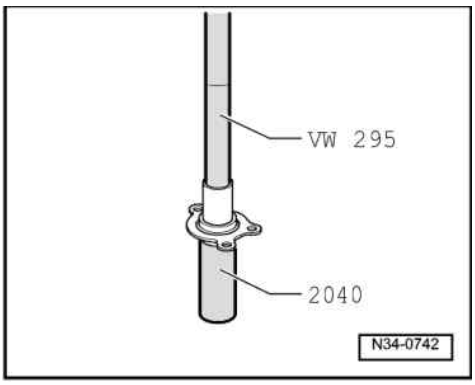

-> Fig.3 Knocking oil seal out of guide sleeve.

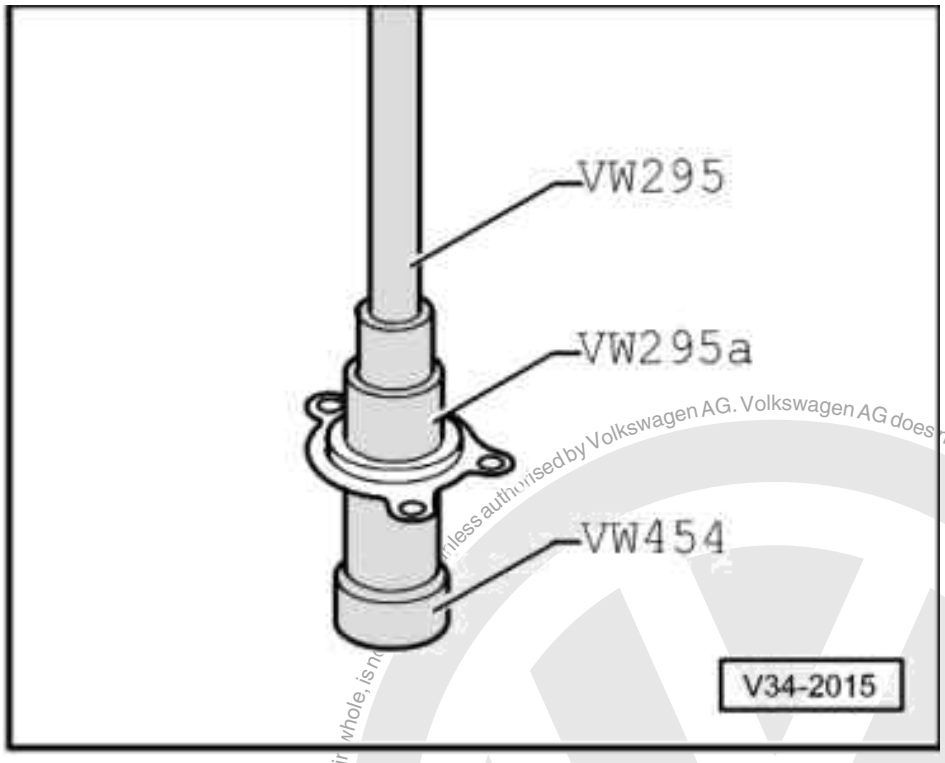

-> Fig.4 Knock oil seal into the guide sleeve onto stop.

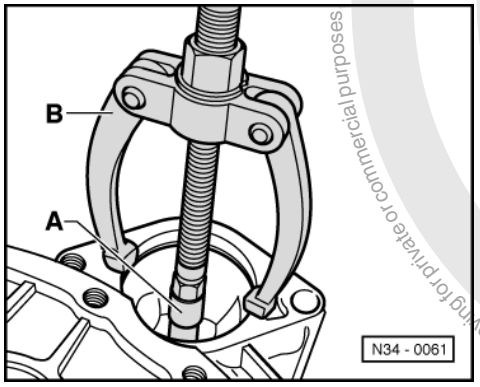

Protected by copyright. Copying for private or commercial purposes, in part or in whole, is not permitted unless authorised by Volkswagen AG. Volkswagen AG does not guarantee or accept any liability with respect to the correctness of information in this document. Copyright by Volkswagen AG.
satelettronica

-> Fig.5 Pulling out starter bush.

A - Internal extractor 12 ... 14.5 mm, e.g. Kukko 21/1

B - Counter support. e.g. Kukko 22/1

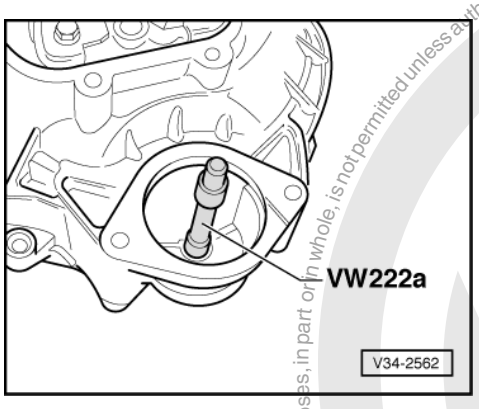

-> Fig.6 Knocking in starter bush.

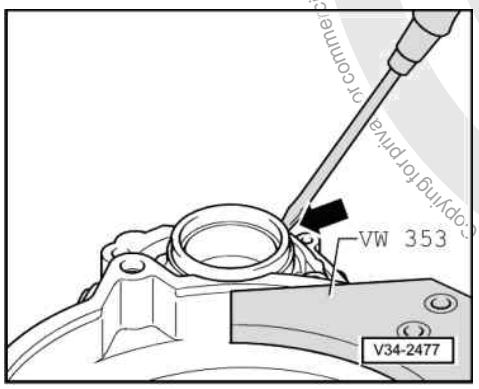

-> Fig.7 Lever out sleeve -arrow- with screwdriver

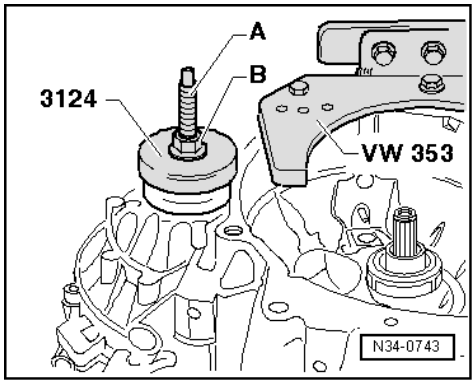

-> Fig.8 Pulling sleeve in

A - Screw threaded rod from assembly tool 3066 into differential threaded piece
B - Nut M12 with washer

- Pull sleeve in onto stop with thrust piece 3124 by turning on nut -B-.

Protected by copyright. Copying for private or commercial purposes, in part or in whole, is not permitted unless authorised by Volkswagen AG. Volkswagen AG does not guarantee or accept any liability with respect to the correctness of information in this document. Copyright by Volkswagen AG.
satelettronica

Note:

When gearbox is dismantled press sleeve in with thrust piece 3124 onto stop.

7 - Dismantling and assembling gearbox selector mechanism up to 09.99

7.1 - Dismantling and assembling gearbox selector mechanism up to 09.99

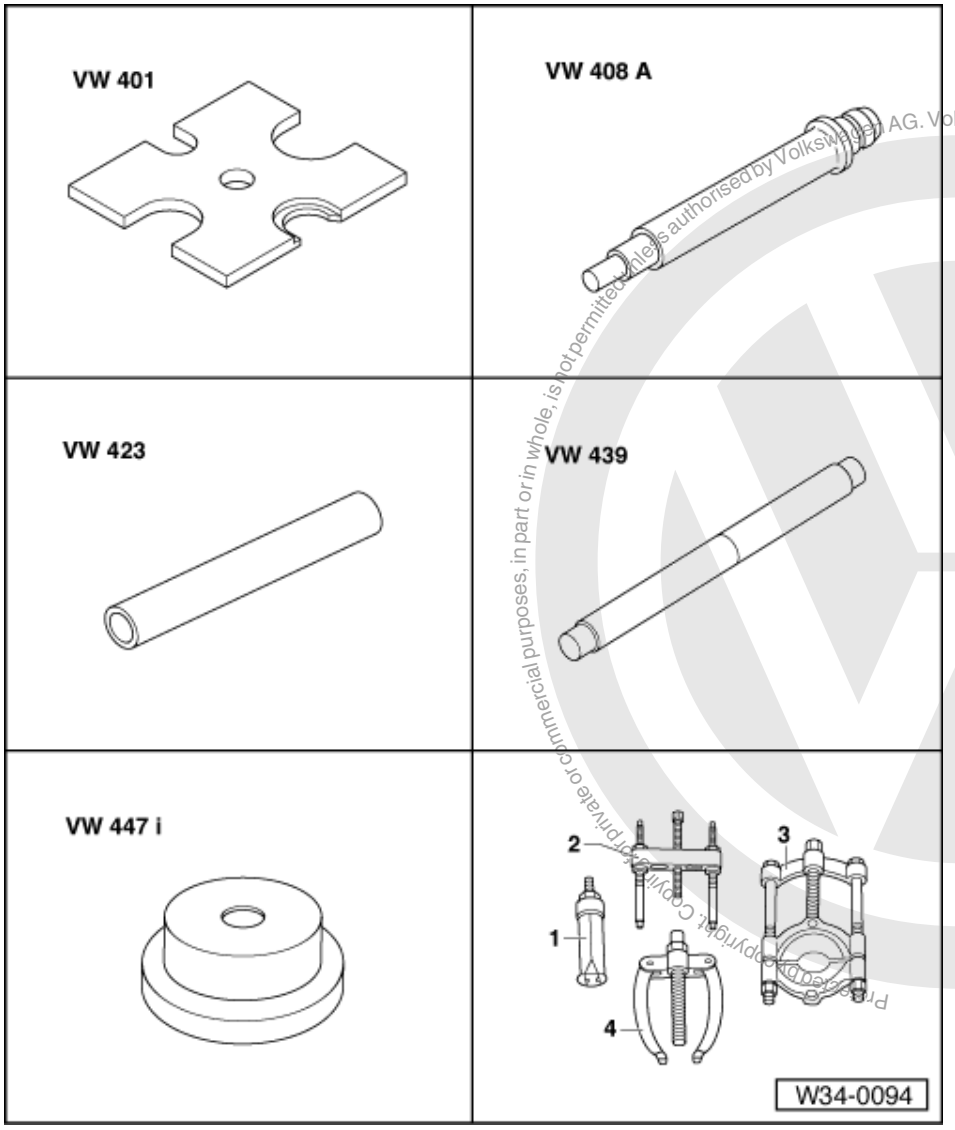

Copyright by Volkswagen AG. Volkswagen AG does not guarantee or accept any liability with respect to the correctness of information in this document. Copyright by Volkswagen AG. Reproduction, in part or in whole, is not permitted unless authorised by Volkswagen AG. Copyright. Copying for private or commercial purposes, in part or in whole, is not permitted unless authorised by Volkswagen AG.
satelettronica

Special tools and workshop equipment required

- VW 401 Thrust plate
- VW 408 A Press tool
- VW 423 Tube
- VW 439 Guide pin
- VW 447 i Thrust plate
- 1 - Kukko 21/3 Internal puller

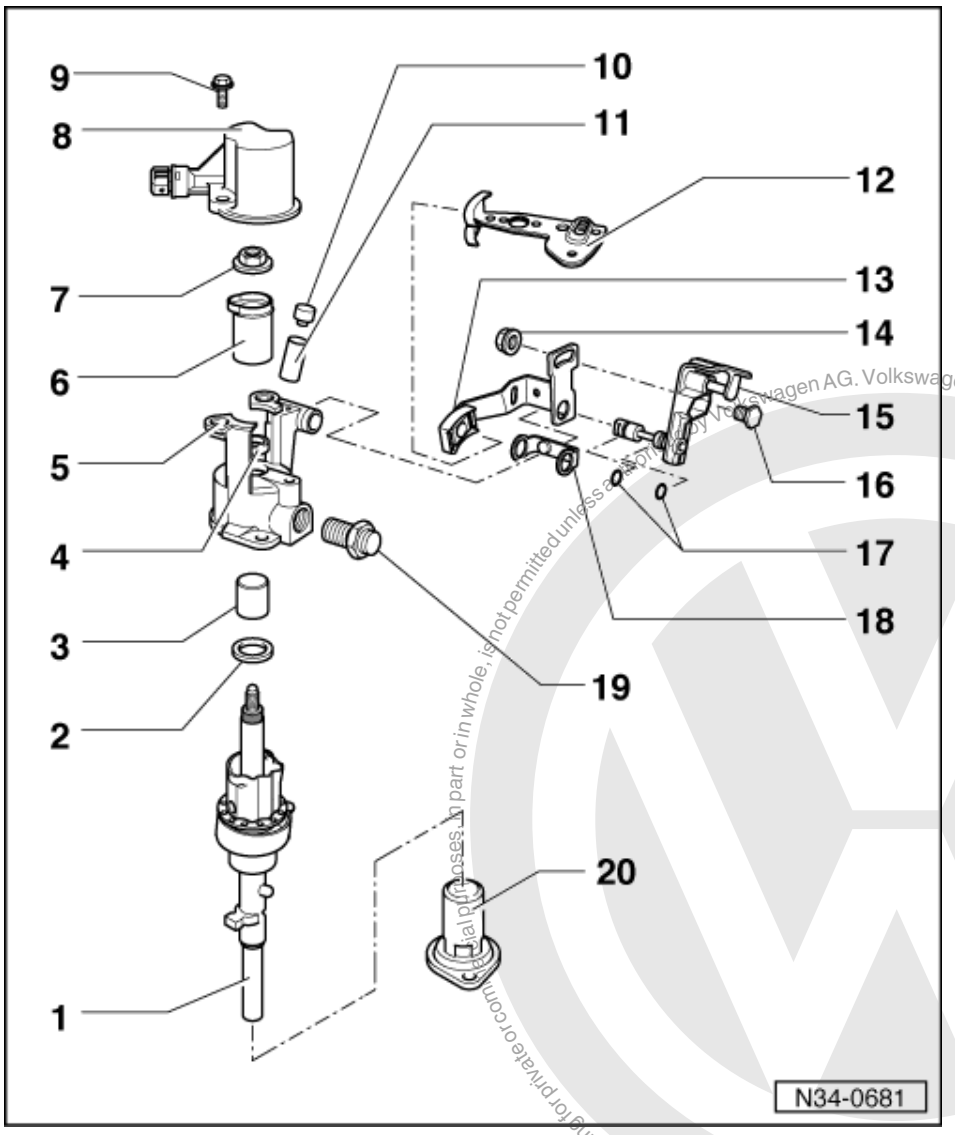

1 Selector shaft
2 Stop ring
3 Ball sleeve
- Removing => Fig. 1
- Pressing in => Fig. 2

4 Oil seal
- Lever out with screwdriver
- Installing => Fig. 3

5 Selector mechanism cover
6 Sleeve
- The lug points to reverse light switch
- Lightly coat lug with MoS2 grease

7 Hexagon nut, 25 Nm
- Self-locking
- Always renew

Protected by copyright. Copying for private or commercial purposes, in part or in whole, is not permitted unless authorised by Volkswagen AG. Volkswagen AG does not guarantee or accept any liability with respect to the correctness of information in this document. Copyright by Volkswagen AG.
satelettronica

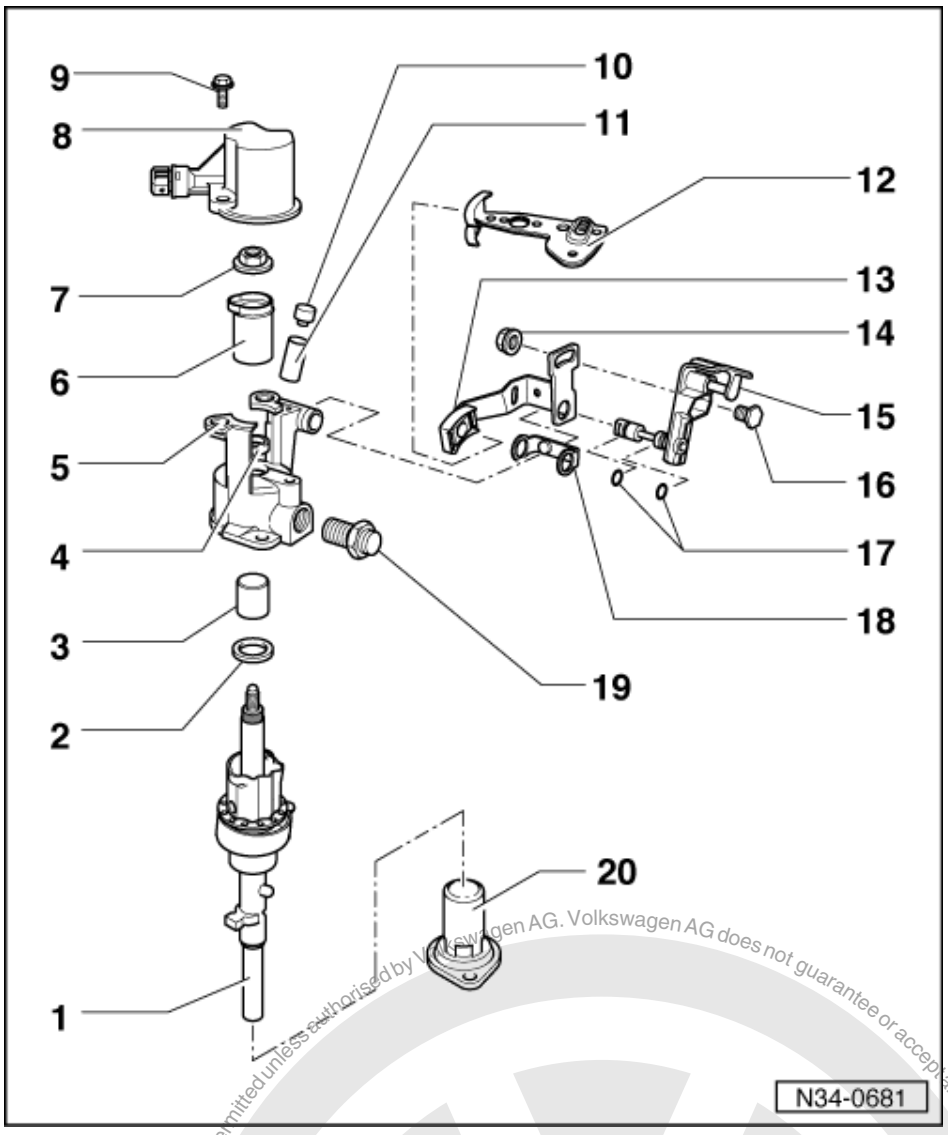

8 Housing
- For reversing light switch

9 bolt

10 Cap
- For gearbox breather

11 Sleeve
- Drive in onto stop if present as an individual part

12 Gear selector lever
- Install so that the master spline aligns with selector shaft
- Can be replaced with the selector mechanism installed
- Installation position =>Page 43

13 Relay lever
- Installation position => Page 43

14 Nut, 15 Nm

Protected by copyright. Copying for private or commercial purposes, in part or in whole, is not permitted unless authorised by Volkswagen AG. Volkswagen AG does not guarantee or accept any liability with respect to the correctness of information in this document. Copyright by Volkswagen AG.
satelettronica

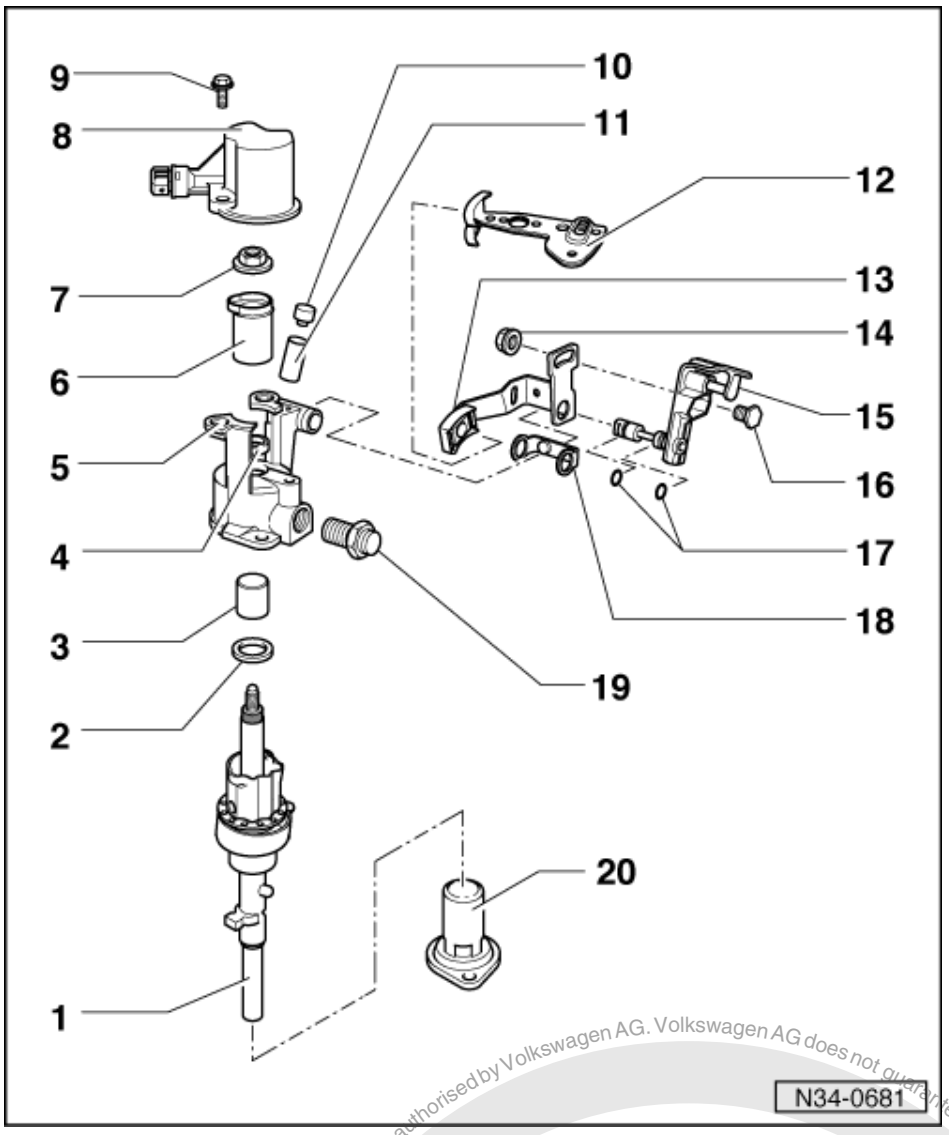

15 Actuating arm
- With axis pin for mounting relay lever
- Installation position => Page 43

16 Bolt
- Press into actuating arm

17 O-ring
- Pull onto actuating arm axis pin

18 Spacer
- Press into relay lever

19 Locking bolt, 40 Nm

20 End cover

satelettronica
Protected by copyright. Copying for private or commercial purposes, in part or in whole, is only permitted with the consent of the copyright owner. Unauthorised use prohibited. Copyright by Volkswagen AG. Volkswagen AG does not guarantee or accept any liability with respect to the correctness of information in this document.

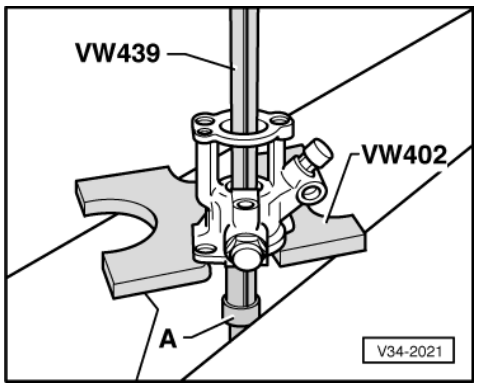

-> Fig.1 Removing ball sleeve from selector mechanism cover

- Before pulling out ball sleeve, destroy plastic cage and remove balls.

A - Internal extractor, e.g. Kukko 21/3, 18.5 ... 23.5 mm

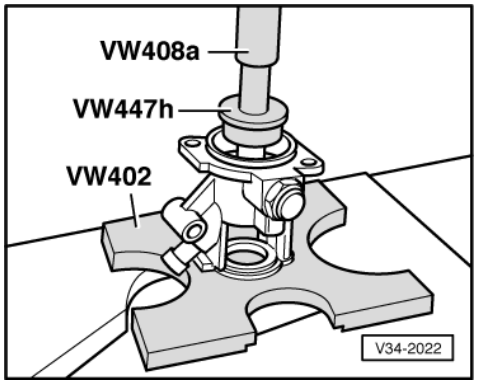

-> Fig.2 Knocking ball sleeve into selector mechanism cover

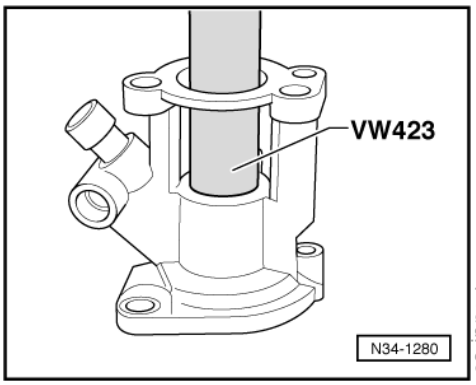

Protected by copyright. Copying for private or commercial purposes, in part or in whole, is not permitted unless authorised by Volkswagen AG. Volkswagen AG does not guarantee or accept any liability with respect to the correctness of information in this document. Copyright by Volkswagen AG.
satelettronica

-> Fig.3 Installing oil seal onto stop

8 - Dismantling and assembling gearbox selector mechanism from 10.99

8.1 - Dismantling and assembling gearbox selector mechanism from 10.99

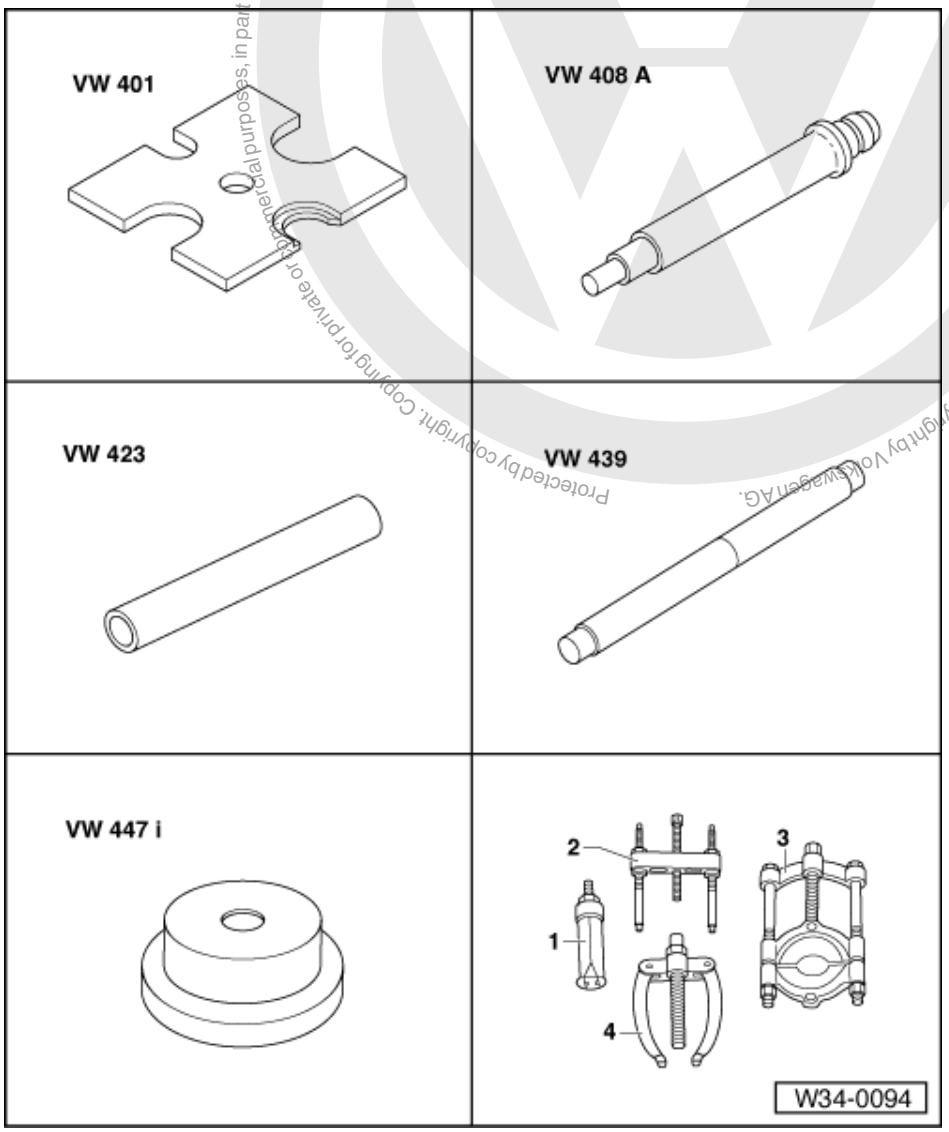

Special tools and workshop equipment required

- VW 401 Thrust plate
- VW 408 A Press tool
- VW 423 Tube
- VW 439 Guide pin
- VW 447 i Thrust plate
- 1 - Kukko 21/3 Internal puller

Protected by copyright. Copying for private or commercial purposes, in part or in whole, is not permitted unless authorised by Volkswagen AG. Volkswagen AG does not guarantee or accept any liability with respect to the correctness of information in this document. Copyright by Volkswagen AG.
satelettronica

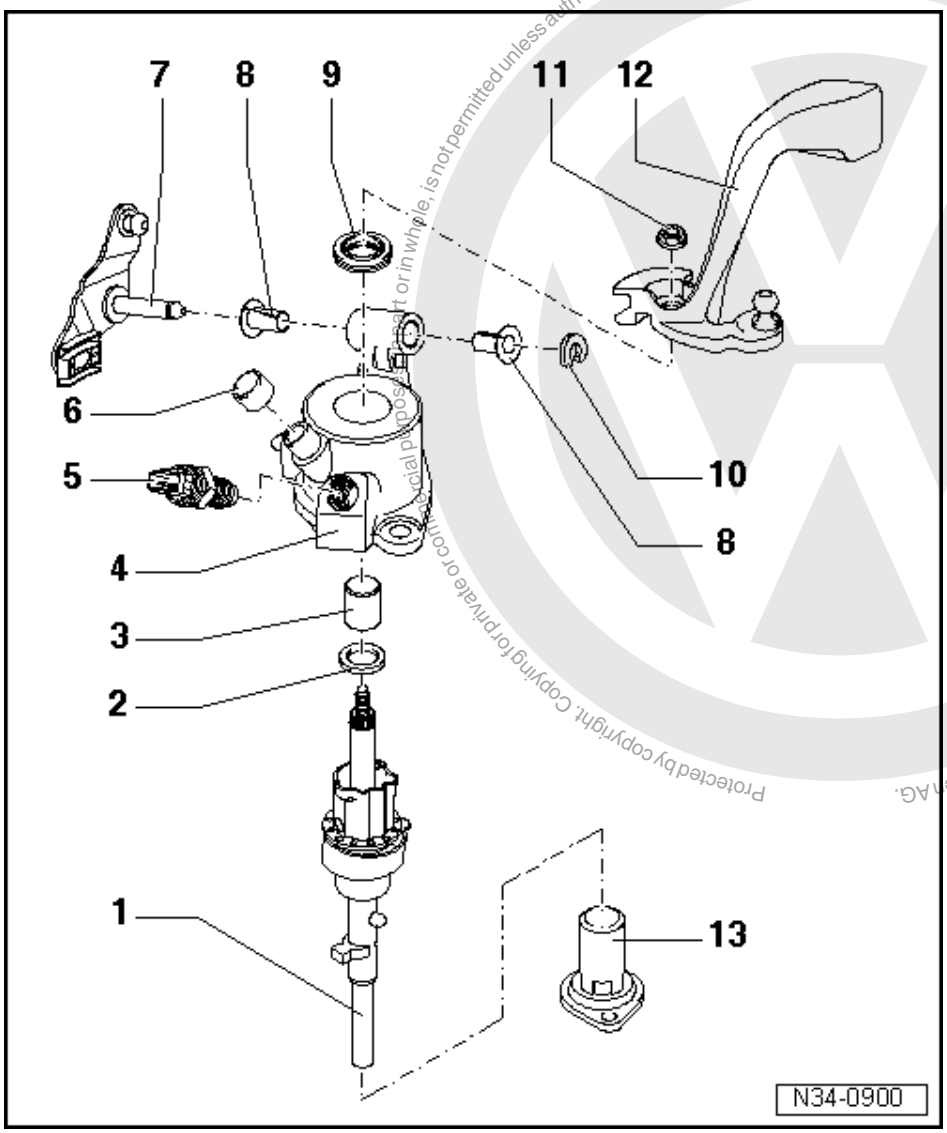

1 Selector shaft
- Revised stop sleeves, which allows the selector shaft to be guided into the 4th gear gate when changing down from 5th to 4th gear, have been introduced as of gearbox build date 04 09 0 =>Fig. 4
- From gearbox build date 06 08 1 additional locking mechanism in end cover =>Fig. 5

2 Stop ring

3 Ball sleeve
- Removing => Fig. 1
- Pressing in => Fig. 2

4 Selector mechanism cover
- With an additional bolt which allows the selector shaft to be guided into the 4th gear gate when changing down from 5th to 4th gear, have been introduced as of gearbox build date 04 09 0 => Fig. 4

Protected by copyright. Copying for private or commercial purposes, in part or in whole, is not permitted unless authorised by Volkswagen AG. Volkswagen AG does not guarantee or accept any liability with respect to the correctness of information in this document. Copyright by Volkswagen AG.
satelettronica

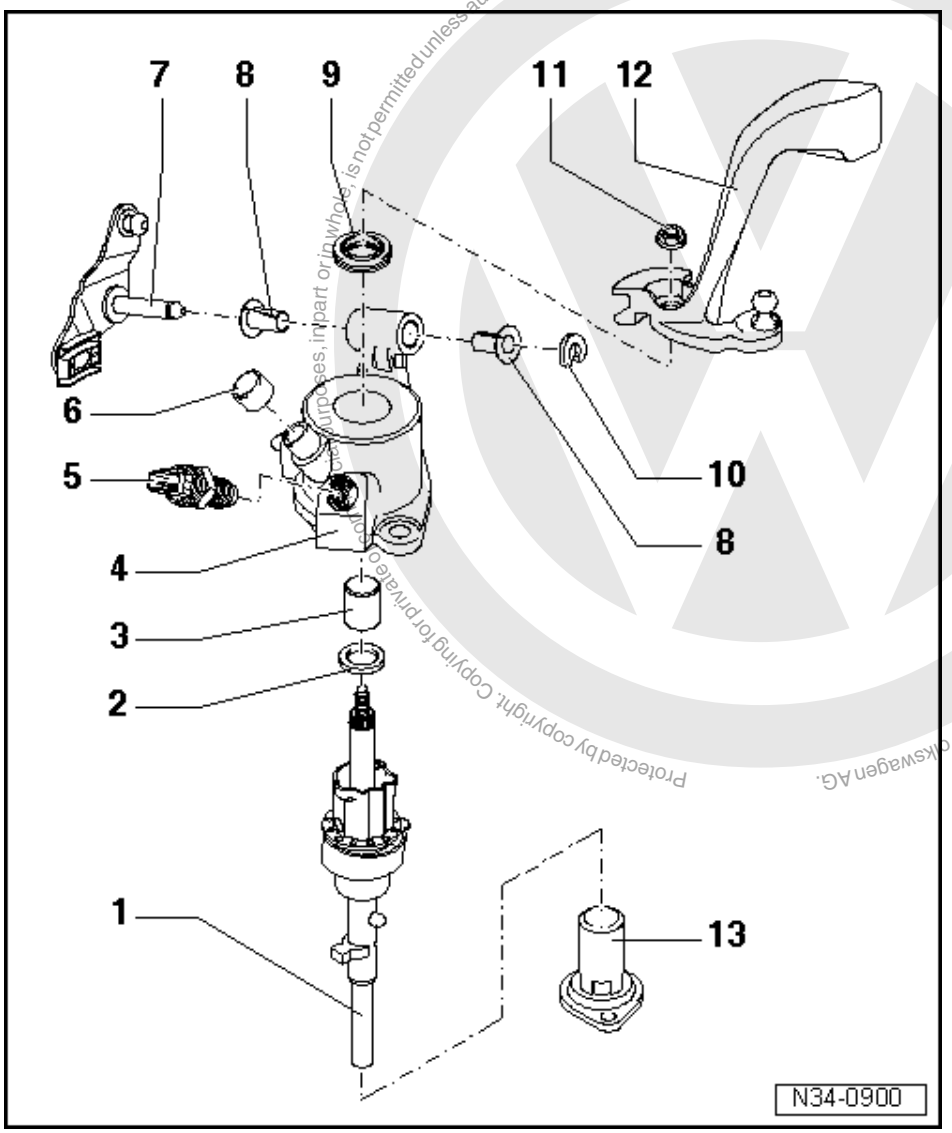

5 Reversing light switch, 20 Nm
- Lightly coat lug with MoS2 grease

6 Cap
- For gearbox breather

7 Relay lever
- Installation position => Page 43

8 Bush

9 Oil seal
- Lever out with screwdriver
- Installing => Fig. 3

10 Circlip

Protected by copyright. Copying for private or commercial purposes, in part or in whole, is not permitted unless authorised by Volkswagen AG. Volkswagen AG does not guarantee or accept any liability with respect to the correctness of information in this document. Copyright by Volkswagen AG.
satelettronica

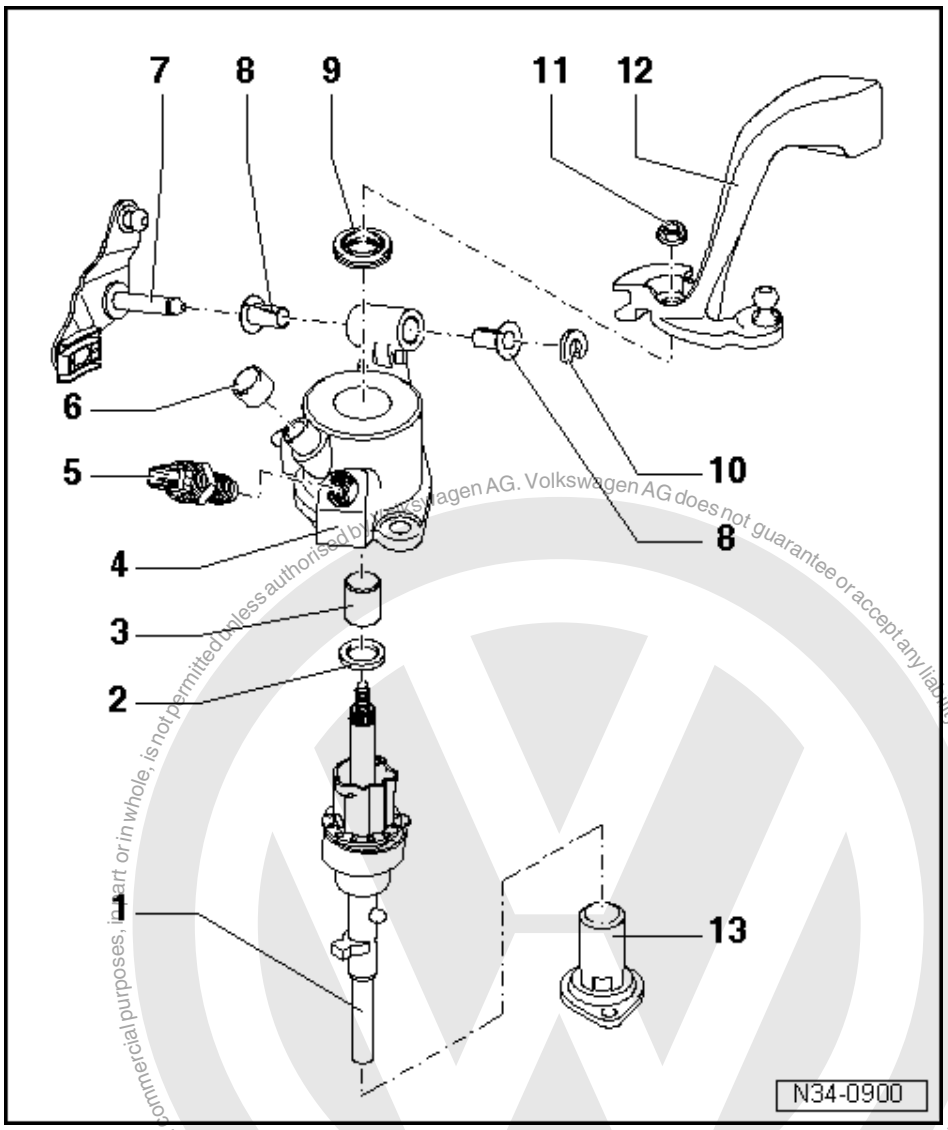

11 Hexagon nut, 25 Nm
- Self-locking
- Always renew

12 Gear selector lever
- Install so that the master spline aligns with selector shaft
- Can be replaced with the selector mechanism installed
- Installation position =>Page 43

13 End cover
- From gearbox build date 06 08 1 with locking mechanism for the selector shaft => Fig. 5

Protected by copyright. Copyright by Volkswagen AG. Volkswagen AG does not guarantee or accept any liability with respect to the correctness of information in this document. Copyright by Volkswagen AG. Commercial purposes, in part or in whole, is not permitted unless authorised by Volkswagen AG.
satelettronica

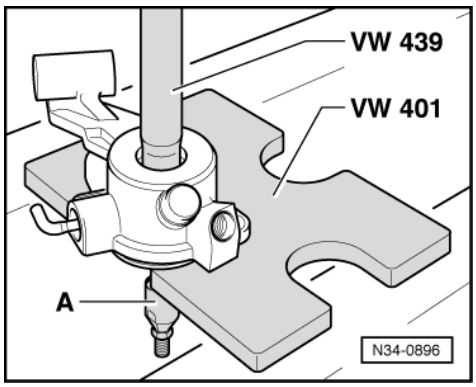

-> Fig.1 Removing ball sleeve from selector mechanism cover

- Before pulling out ball sleeve, destroy plastic cage and remove balls.

A - Internal extractor, e.g. Kukko 21/3, 18.5 ... 23.5 mm

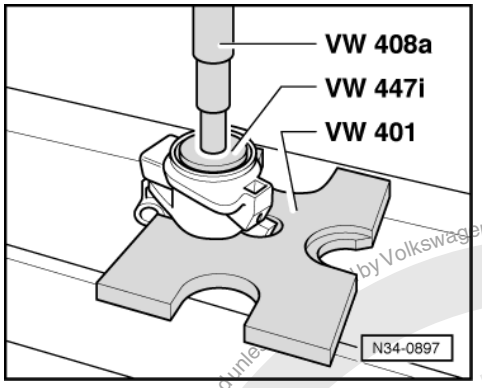

-> Fig.2 Pressing ball sleeve into selector mechanism cover

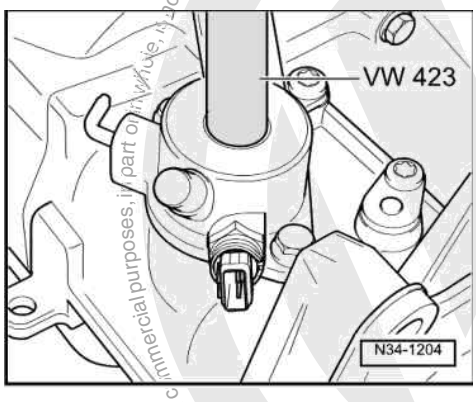

Protected by copyright. Copying for private or commercial purposes, in part or in whole, is not permitted unless authorised by Volkswagen AG. Volkswagen AG does not guarantee or accept any liability with respect to the correctness of information in this document. Copyright by Volkswagen AG.
satelettronica

-> Fig.3 Installing oil seal onto stop

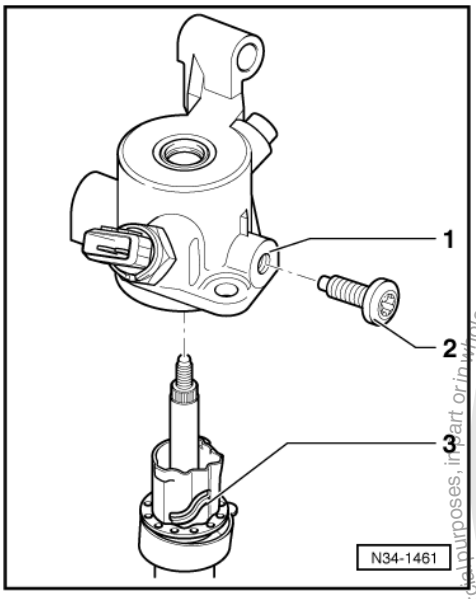

-> Fig.4 Revised selector cover and selector shaft

As of gearbox build date 04 09 0 bolt -2- is installed in selector cover -1-.

Tightening torque

15 Nm

In conjunction with this the stop sleeve is fitted with a bridge -3-.

Functional check

When shifting down from 5th gear to 4th gear the bolt -2- guides the selector shaft over bridge -3- into 4th gear gate.

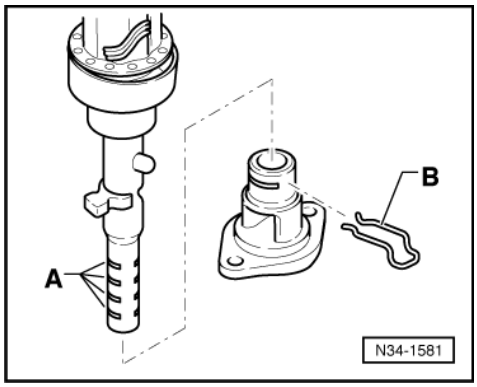

-> Fig.5 Revised selector shaft and selector cover

From gearbox build date 06 08 1 the selector shaft has four grooves -A-.

The spring clip -B- is inserted in the cover.

Protected by copyright. Copying for private or commercial purposes, in part or in whole, is not permitted unless authorised by Volkswagen AG. Volkswagen AG does not guarantee or accept any liability with respect to the correctness of information in this document. Copyright by Volkswagen AG.
satelettronica

Functional check

Selector shaft is locked into cover by inserting a spring clip -B- through one of the grooves -A-, with a forward gear engaged.

Protected by copyright. Copyright for private or commercial purposes, in part or in whole, is not permitted unless authorised by Volkswagen AG. Volkswagen AG does not guarantee or accept any liability with respect to the correctness of information in this document. Copyright by Volkswagen AG.

9 - Dismantling and assembling selector forks

9.1 - Dismantling and assembling selector forks

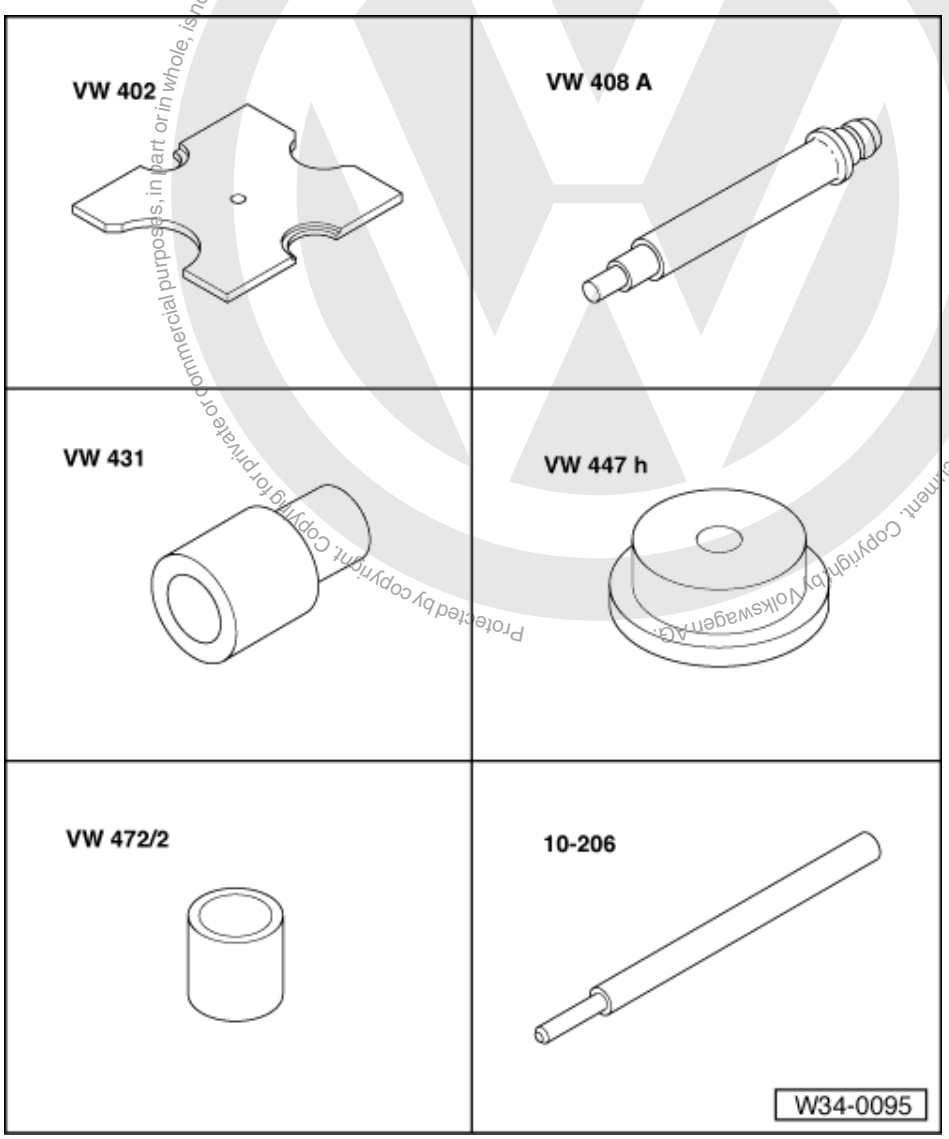

Special tools and workshop equipment required

- VW 402 Thrust plate
- VW 408 A Press tool
- VW 431 Press piece
- VW 447 H Press plate
- VW 472/2 Spacer sleeve
- 10-206 Drift

satelettronica

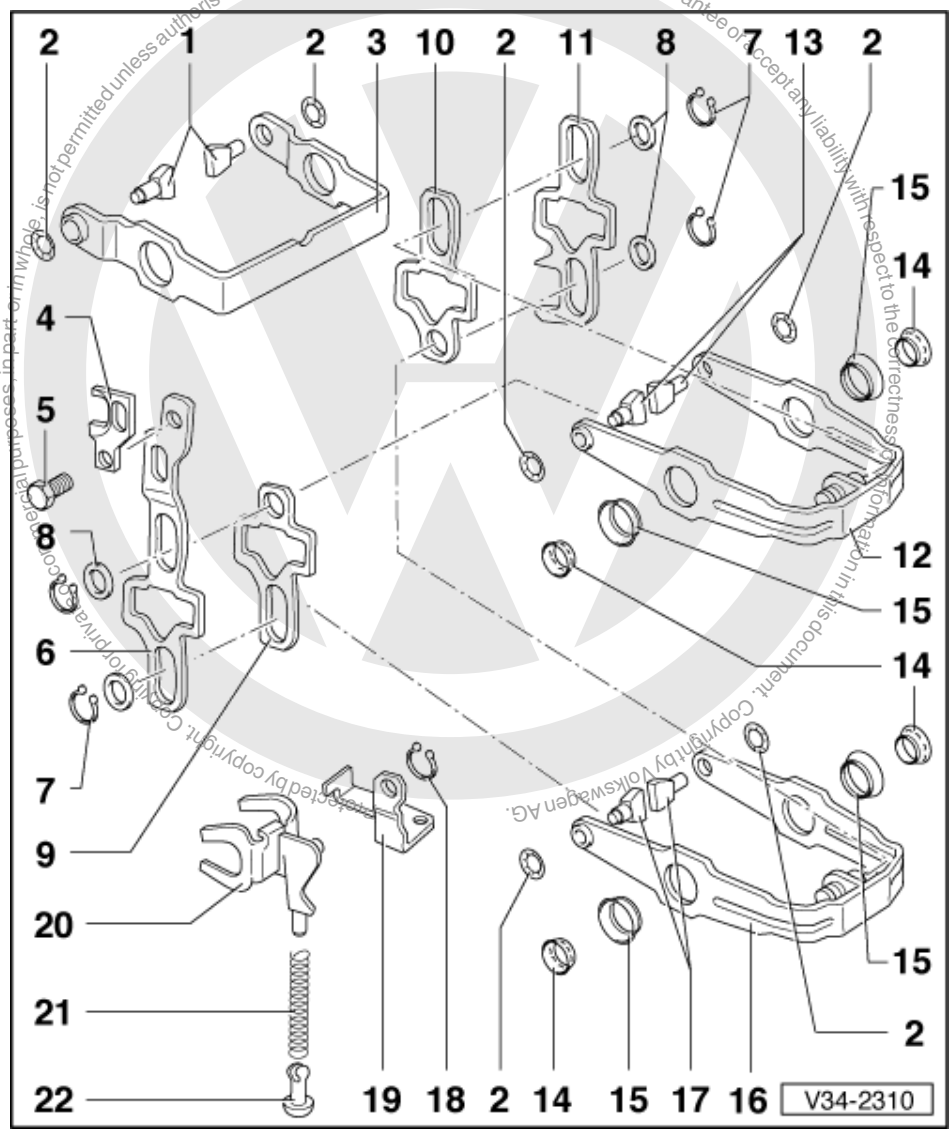

1 Selector segment
- Identification => Fig. 1
- After installing the circlip the selector segment must rotate freely

2 Circlip
- Lever off with screwdriver
- Installing => Fig. 2
- Always renew

3 5th gear selector fork
- Adjusting => Page 116

4 5th gear selector jaw

5 Bolt, 25 Nm

6 5th gear selector plate

7 Circlip

8 Washer

9 3rd/4th gear selector plate

satelettronica

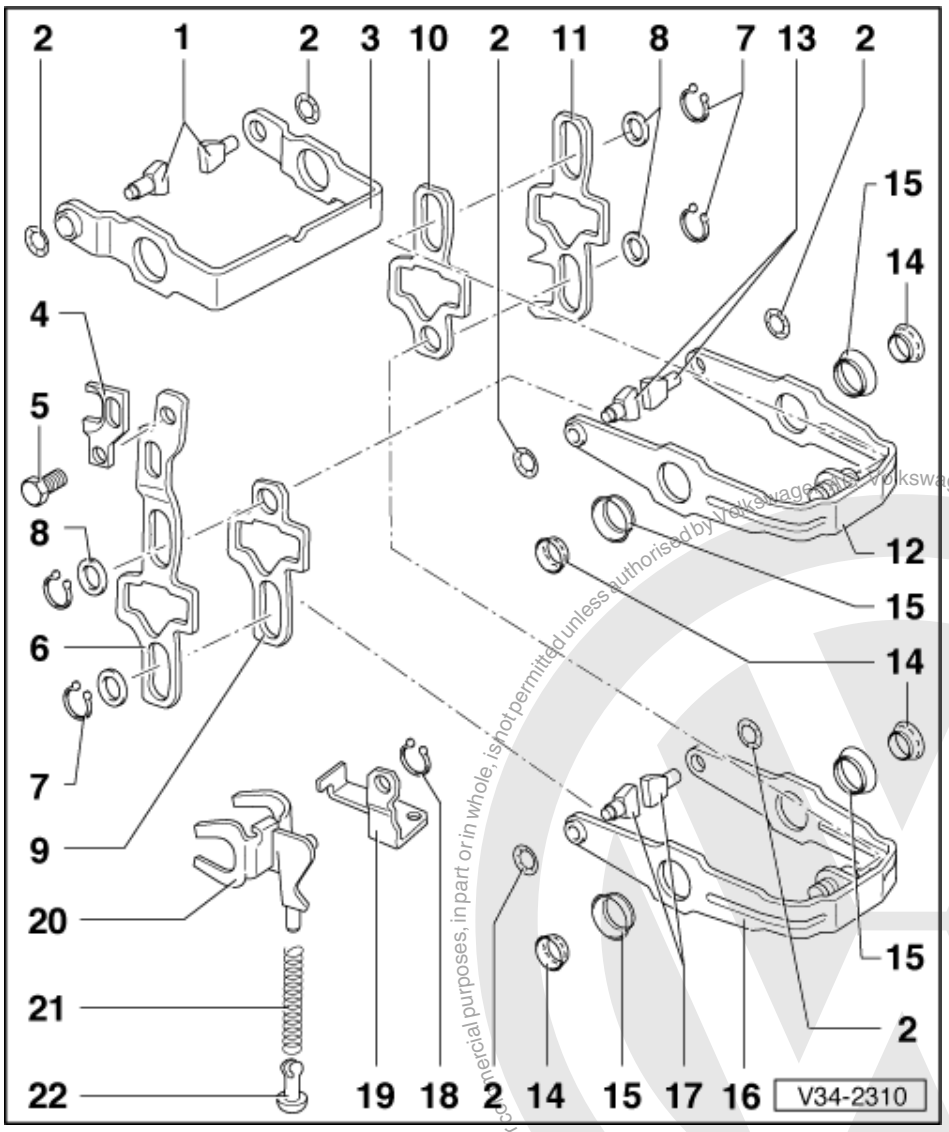

10 1st/2nd gear selector plate

11 Reverse gear selector plate

12 3rd/4th gear selector fork

- With selector segments => Fig. 5

13 Selector segment

- Identification => Fig. 1
- After installing the circlip the segment must rotate freely

14 Bearing

15 Bearing inner race

- Removing => Fig. 3
- Pressing in => Fig. 4

16 1st/2nd selector fork

- With selector segments => Fig. 5

Protected by copyright. Copying for private or commercial purposes, in part or in whole, is not permitted unless authorised by Volkswagen AG. Volkswagen AG does not guarantee or accept any liability with respect to the correctness of information in this document. Copyright by Volkswagen AG.
satelettronica

Protected by copyright. Copyright by Volkswagen AG. Volkswagen AG does not guarantee or accept any liability with respect to the correctness of information in this document. Copyright by Volkswagen AG.
Reproduction is not permitted unless authorised by Volkswagen AG. Volkswagen AG does not guarantee or accept any liability with respect to the correctness of information in this document. Copyright by Volkswagen AG.

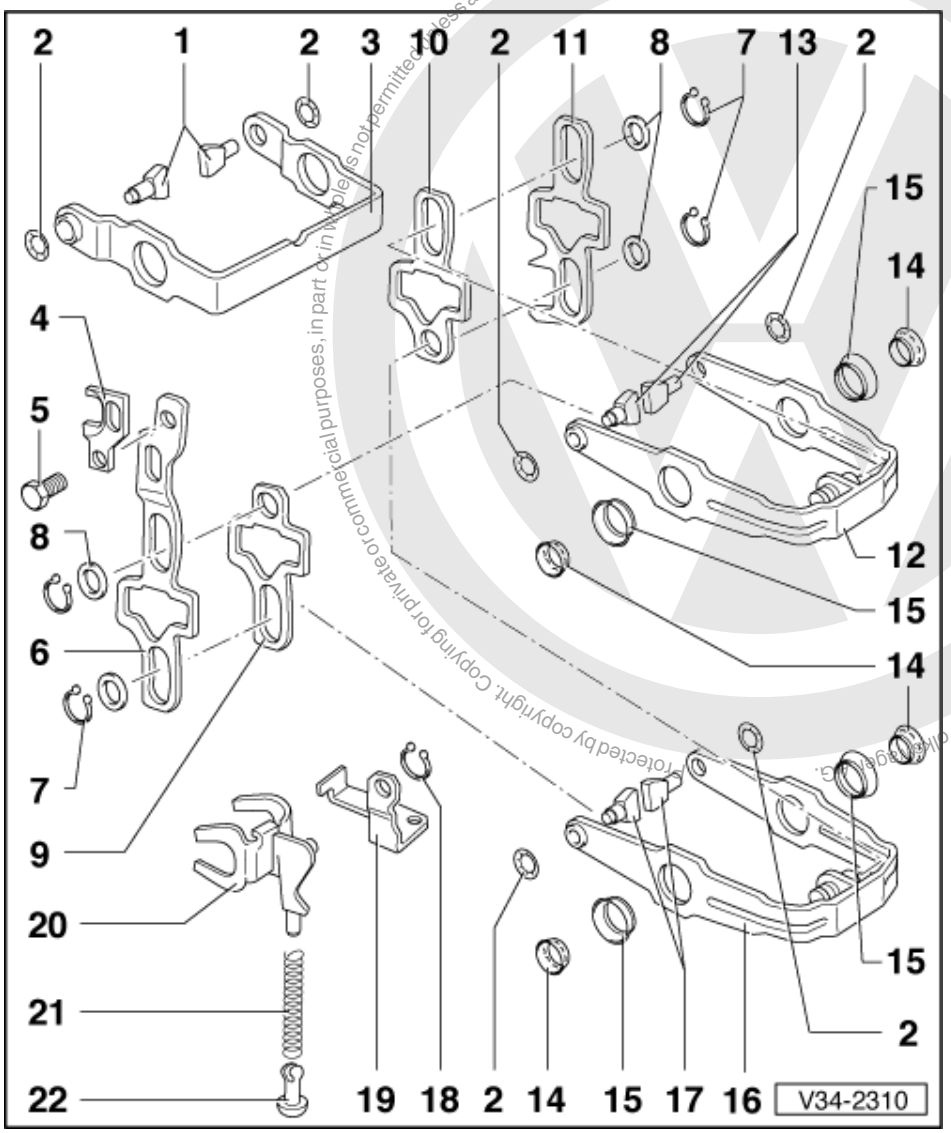

17 Selector segment

- Identification => Fig. 1
- After installing the circlip the segment must rotate freely

18 Circlip

19 Support for reverse gear selector fork

20 Reverse gear selector fork

21 Spring

22 Domed sliding piece

satelettronica

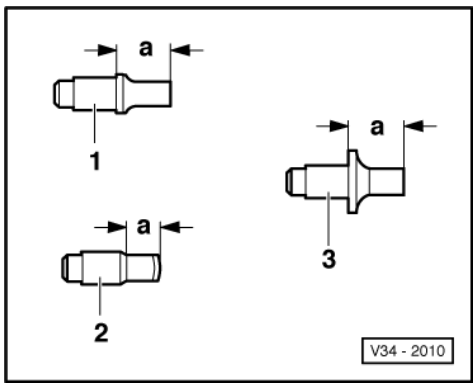

-> Fig.1 Identifying selector segments

Dimension -a-

1 - 1st and 2nd gear selector segments = 12.1 mm

2 - 3rd and 4th gear selector segments = 7.7 mm

3 - 5th gear selector segments = 12.1 mm

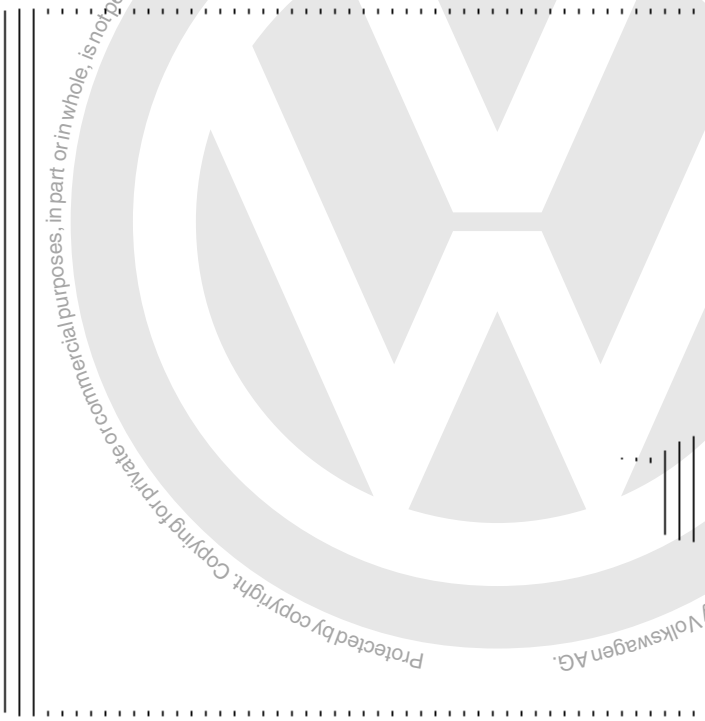

-> Fig.2 Installing circlip

- Press circlip into selector segment groove with socket.

Note:

After installing the circlip the selector segment must rotate freely.

Protected by copyright. Copying for private or commercial purposes, in part or in whole, is not permitted unless authorised by Volkswagen AG. Volkswagen AG does not guarantee or accept any liability with respect to the correctness of information in this document. Copyright by Volkswagen AG.
satelettronica

A - Socket driver, 10 mm A/F

B - Jaw protectors

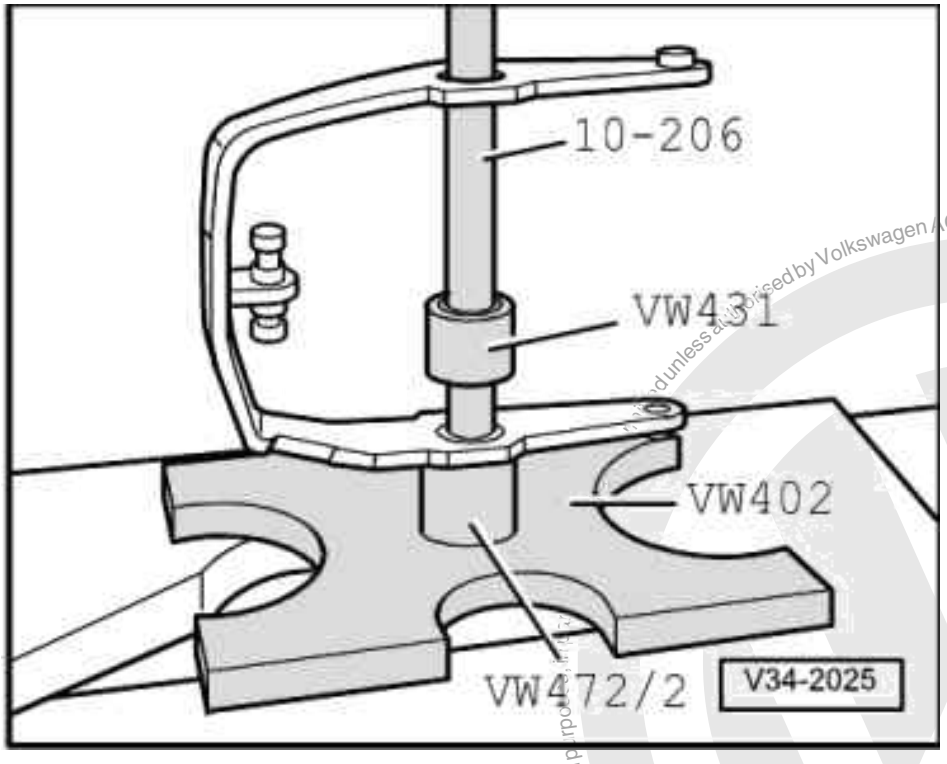

-> Fig.3 Removing bearing inner race

Note:

When removing and installing the inner races do not bend selector forks.

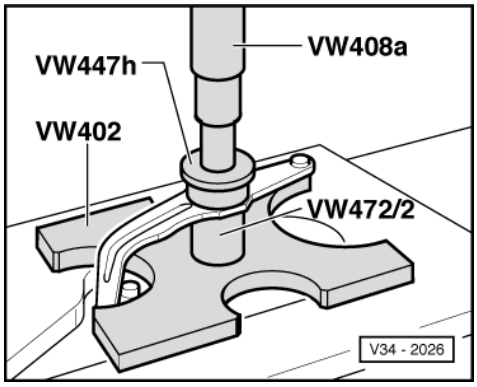

Protected by copyright. Copying for private or commercial purposes, in part or in whole, is not permitted unless authorised by Volkswagen AG. Volkswagen AG does not guarantee or accept any liability with respect to the correctness of information in this document. Copyright by Volkswagen AG.
satelletnica

-> Fig.4 Pressing inner race in onto stop

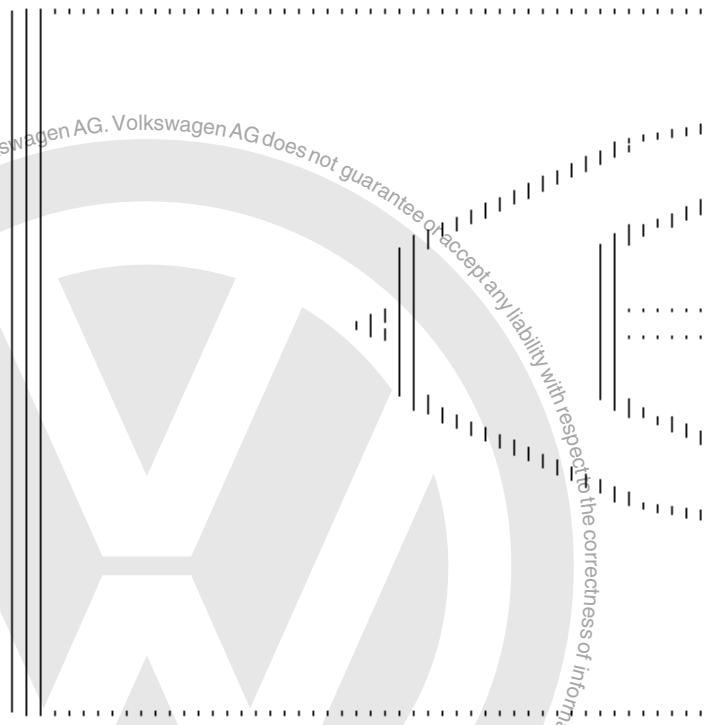

-> Fig.5 Selector fork with selector segments installed

	Dim. -a- (mm)
1st/2nd gear selector fork	87.2 ... 87.9
3rd/4th gear selector forks	96.0 ... 96.7

Selector segment assignment => Fig. 1

Protected by copyright. Copying for private or commercial purposes, in part or in whole, is not permitted unless authorised by Volkswagen AG. Volkswagen AG does not guarantee or accept any liability with respect to the correctness of information in this document. Copyright by Volkswagen AG.

satelettronica

35 - Gears, Shafts

1 - Dismantling and assembling input shaft

1.1 - Dismantling and assembling input shaft

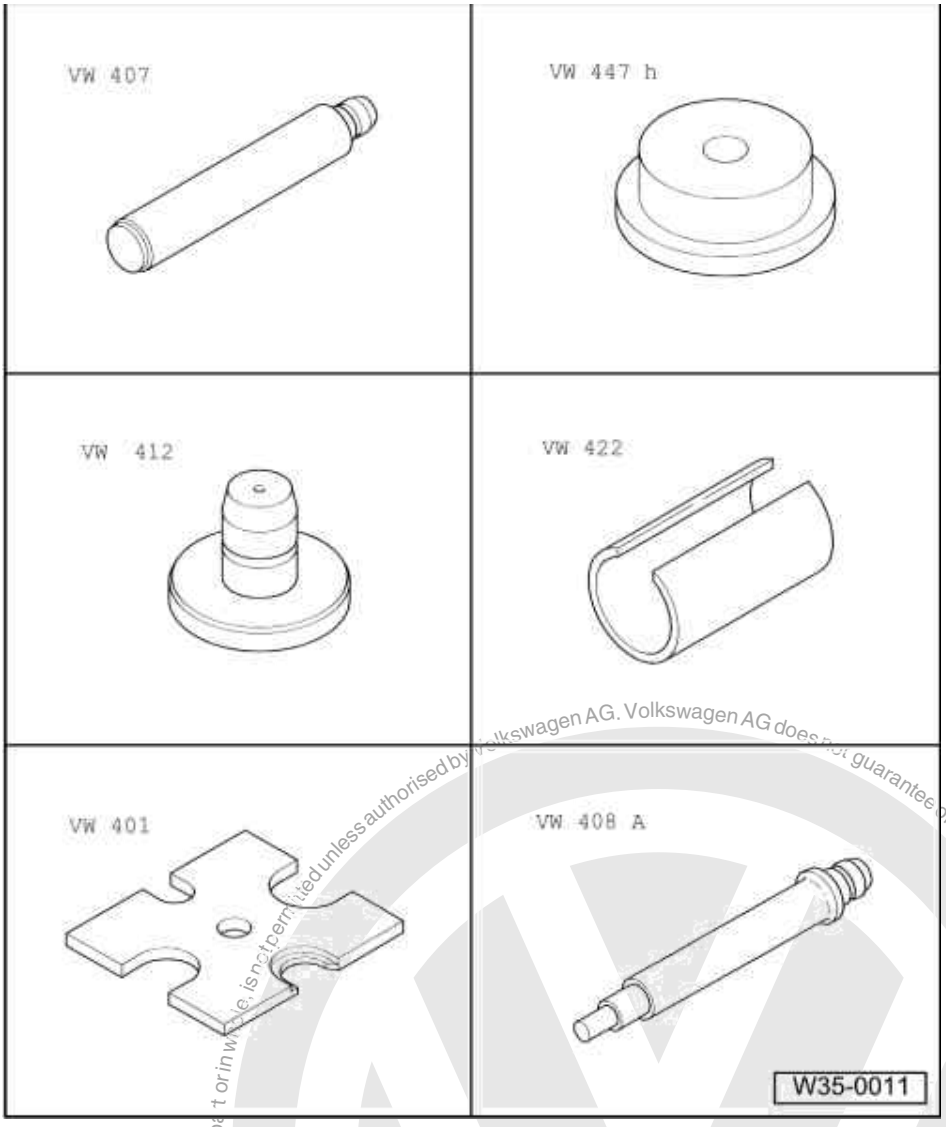

Special tools and workshop equipment required

- VW 407 Press tool
- VW 447 H Press plate
- VW 412 Press tool
- VW 422 Tube
- VW 401 Thrust plate
- VW 408 A Press tool

Protected by copyright. Copying for private or commercial purposes, in part or in whole, is not permitted unless authorised by Volkswagen AG. Volkswagen AG does not guarantee or accept any liability with respect to the correctness of information in this document. Copyright by Volkswagen AG.
satelettronica

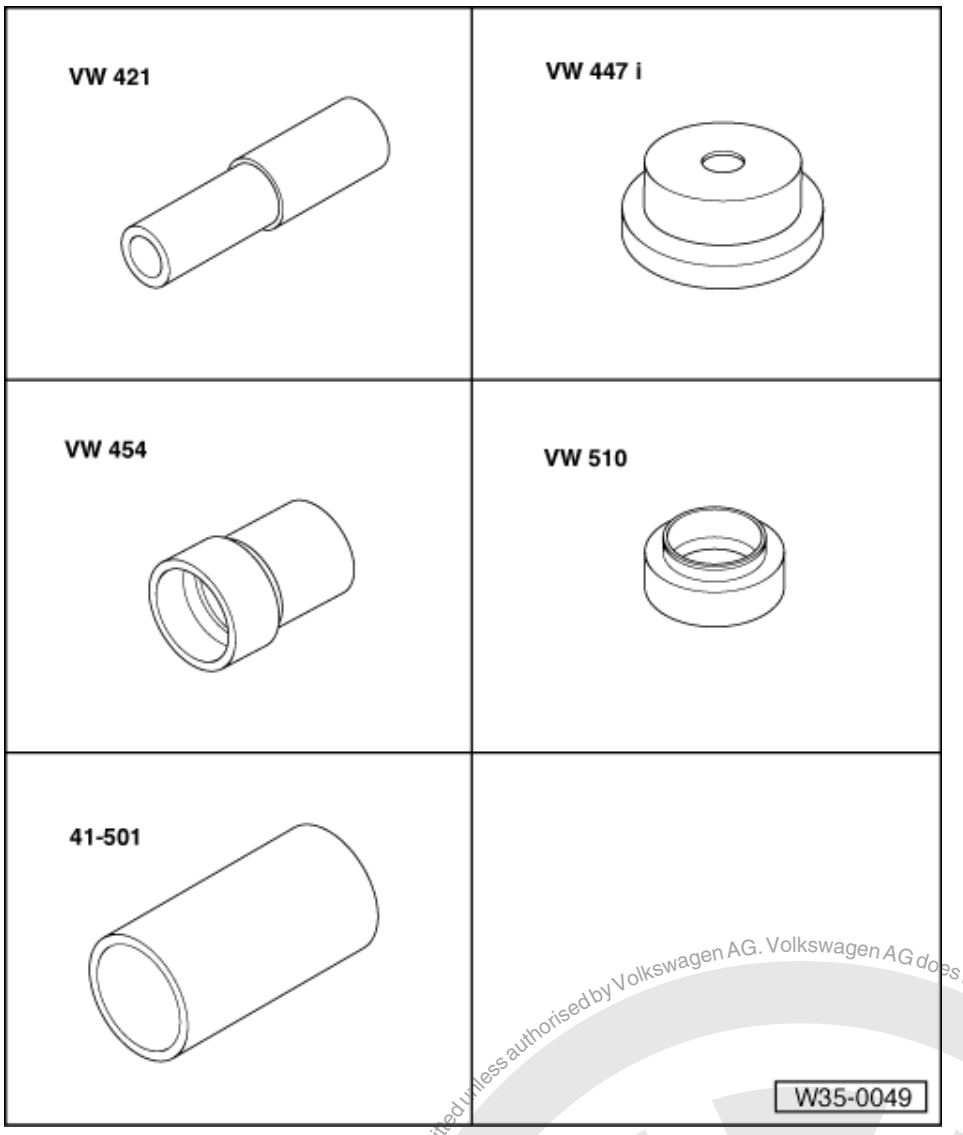

Special tools and workshop equipment required

- VW 421 Tube
- VW 454 Press piece
- VW 447 i Thrust plate
- VW 510 Press piece
- 41-501 Drift sleeve

Protected by copyright. Copying for private or commercial purposes, in part or in whole, is not permitted unless authorised by Volkswagen AG. Volkswagen AG does not guarantee or accept any liability with respect to the correctness of information in this document. Copyright by Volkswagen AG.
satelettronica

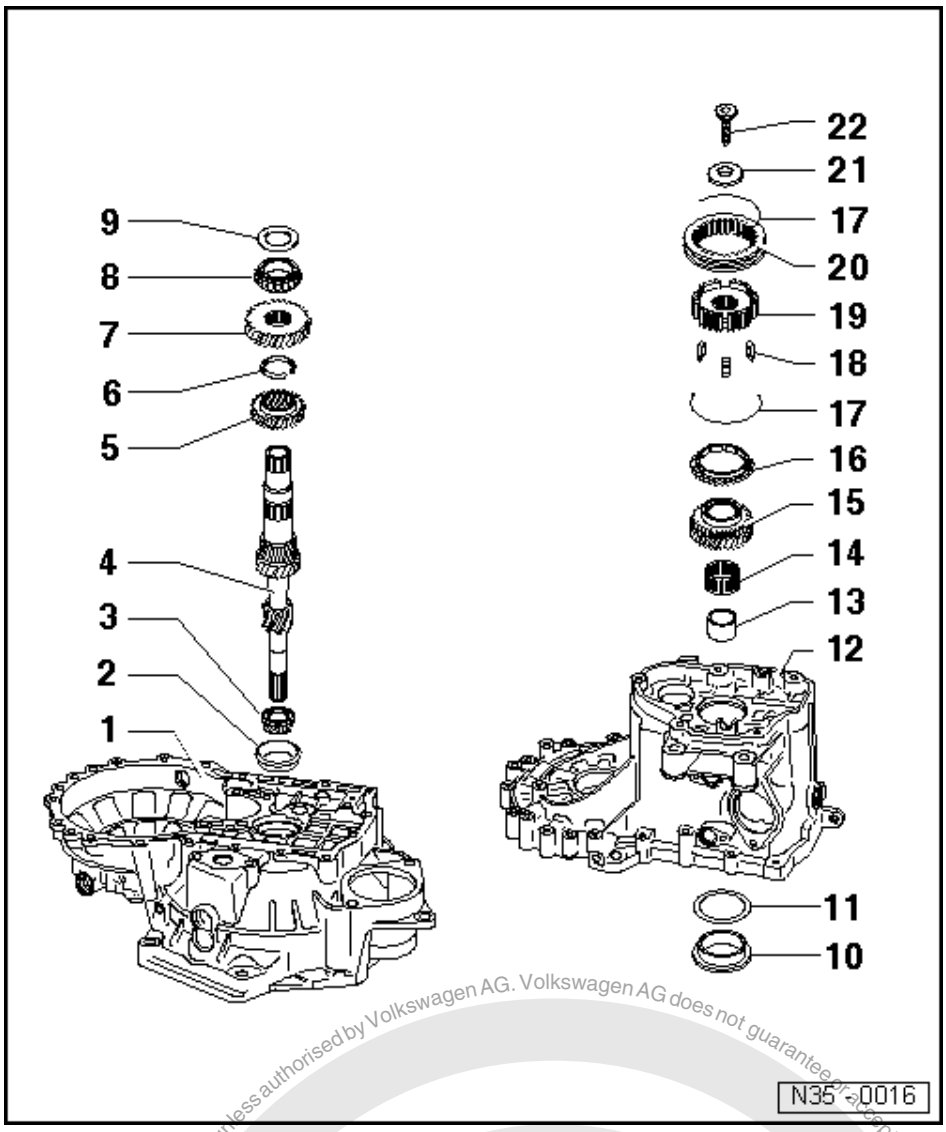

Notes:

- When installing new gears, consult technical data =>page 2 .
- If the position of the taper roller bearings is affected when exchanging parts, the input shaft must be re-adjusted. See adjustment overview => Page 220

1 Clutch housing
2 Taper roller bearing outer race
  - Removing => Fig. 1
  - Pressing in => Fig. 2
3 Taper roller bearing inner race
  - Knock-off the input shaft with a drift
  - Pressing on => fig. 3
4 Input shaft
  - Adjusting => Page 160

Protected by copyright. Copying for private or commercial purposes, in part or in whole, is not permitted unless authorised by Volkswagen AG. Volkswagen AG does not guarantee or accept any liability with respect to the correctness of information in this document. Copyright by Volkswagen AG.
satelettronica

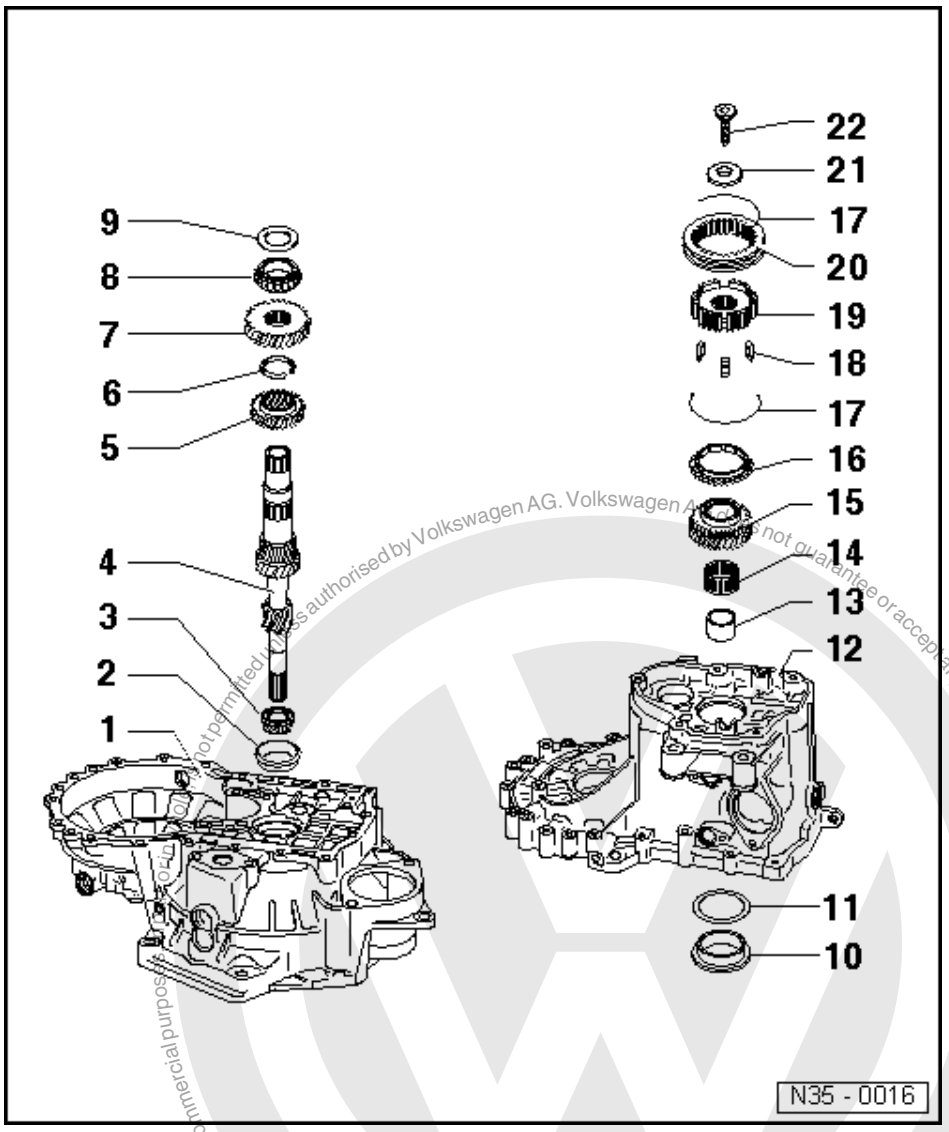

5 3rd gear
- Shoulder points to 4th gear
- Pressing off => Fig. 5
- Pressing on => Fig. 6

6 Circlip
- Always renew

7 4th gear
- Pressing off with taper roller bearing outer race and sleeve => Fig. 4
- Pressing on => Fig. 7
- Collar faces to 3rd gear

8 Taper roller bearing inner race
- Pressing off with 4th gear wheel and sleeve => Fig. 4
- Pressing on => Fig. 8

9 Thrust washer

10 Taper roller bearing outer race
- Pressing out => Fig. 10
- Pressing in => Fig. 11

satelettronica

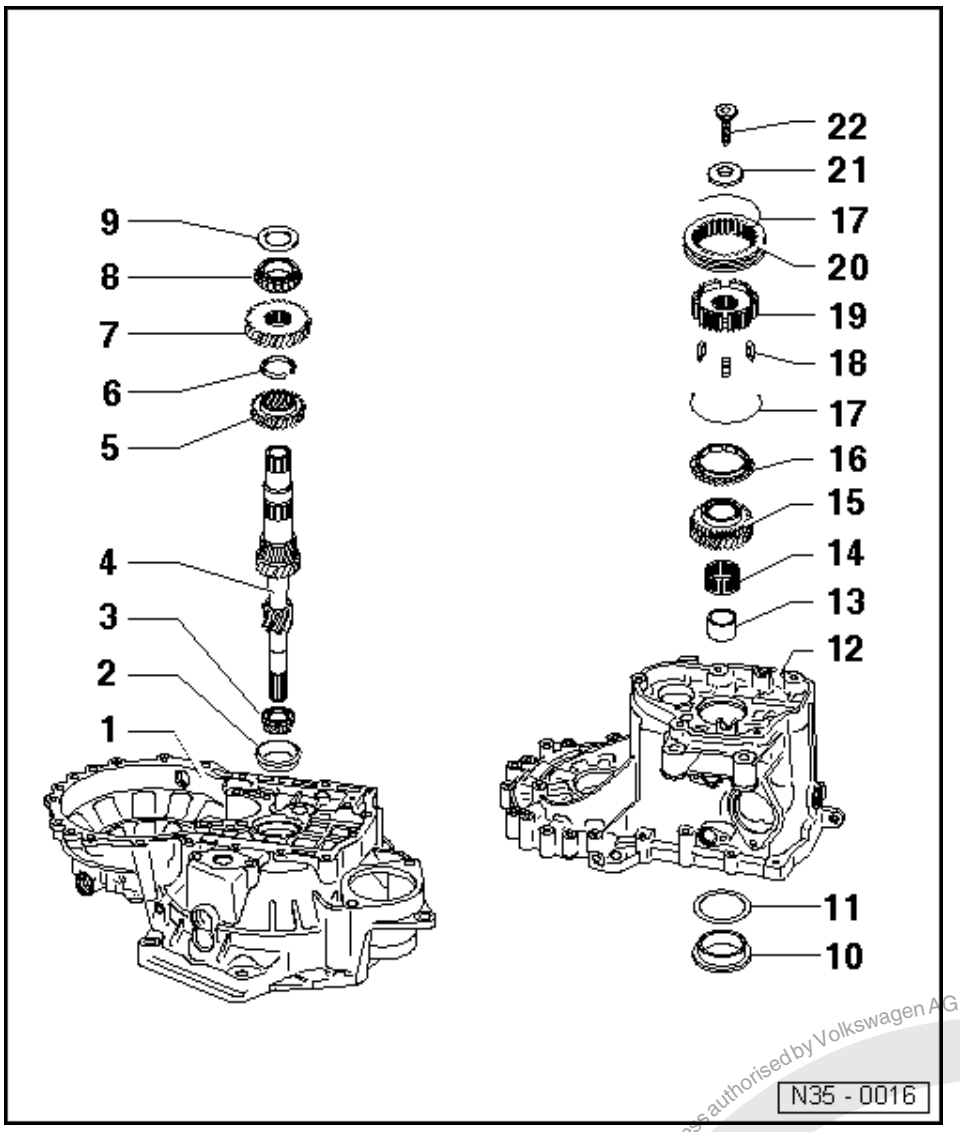

11 Shim
- Determining thickness => adjusting input shaft, Page 160

12 Gearbox housing

13 Sleeve
- For needle roller bearing
- Press off with 4th gear wheel and taper roller bearing inner race => Fig. 4
- Pressing on => fig. 9
- Place thrust washer on before installing (item 9)

14 Needle roller bearing

15 Selector gear for 5th gear
- Pull off together with 5th gear synchro-hub =>from Page 100

satelettronica
Protected by copyright. Copying for private or commercial purposes, in part or in whole, is not permitted unless authorised by Volkswagen AG. Volkswagen AG does not guarantee or accept any liability with respect to the correctness of information in this document. Copyright by Volkswagen AG.

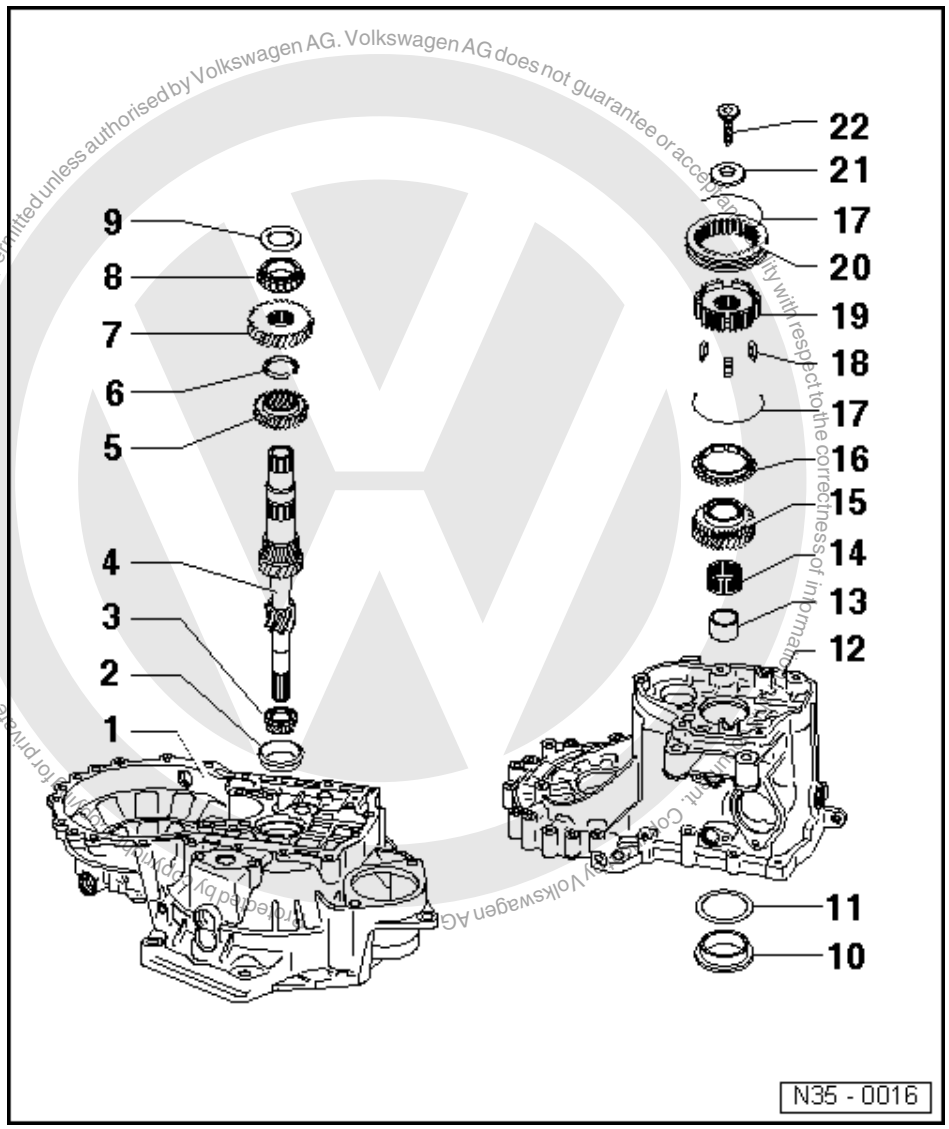

16 5th gear synchro-ring
- With cast locking pieces =>Fig. 12
- Check for wear
  => Page 114

17 Spring
- Installation position => Fig. 14

18 Locking pieces (Qty. 3)
- Installation position => Fig. 13

19 5th gear synchro-hub
- Removing and installing
  => Page 100

20 5th gear locking collar
- Removing and installing
  =>Page 100

satelettronica

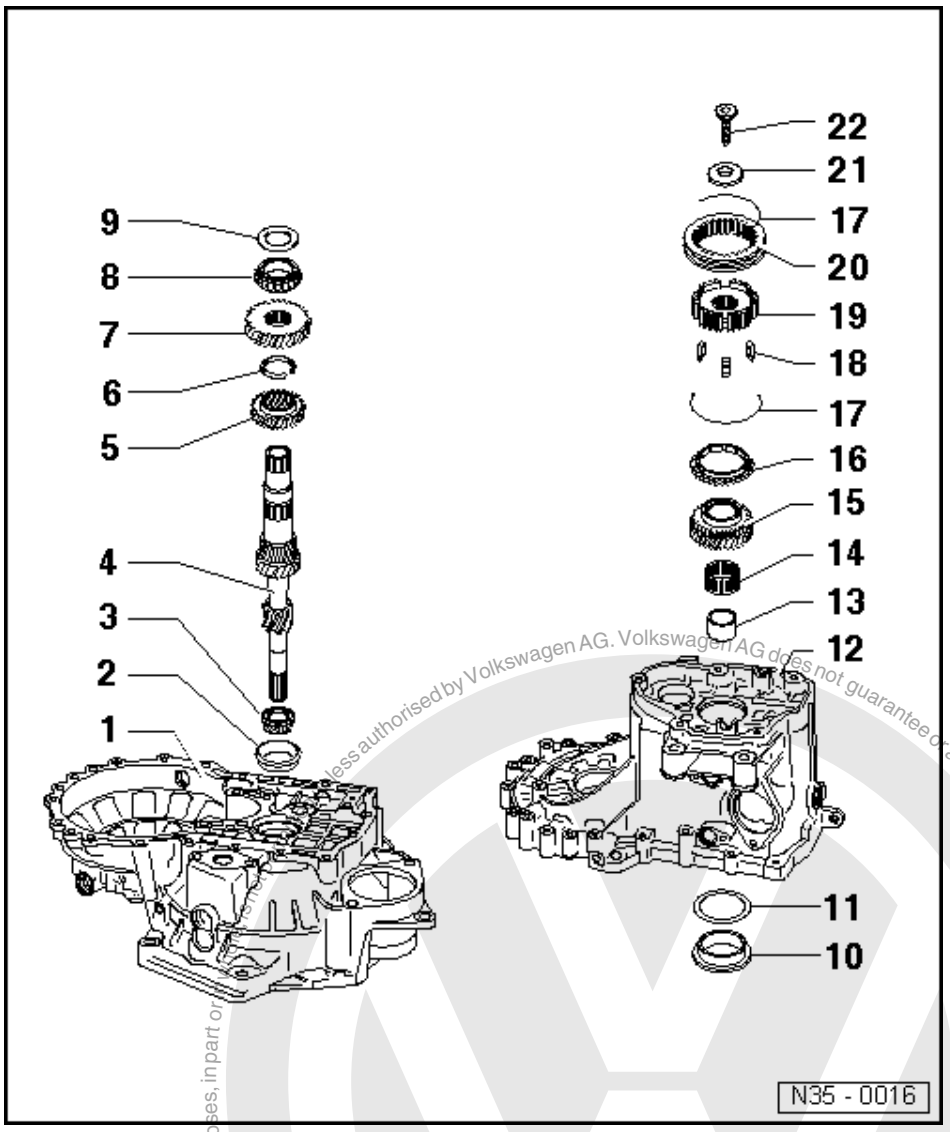

21 Dished washer

- Installation position => Page 116

22 Torx socket head bolt M 10, 80 Nm

- Fitted piece on bolt head locates dished spring => Page 116

Protected by copyright. Copying for private or commercial purposes, in part or in whole, is not permitted unless authorised by Volkswagen AG. Volkswagen AG does not guarantee or accept any liability with respect to the correctness of information in this document. Copyright by Volkswagen AG.
satelettronica

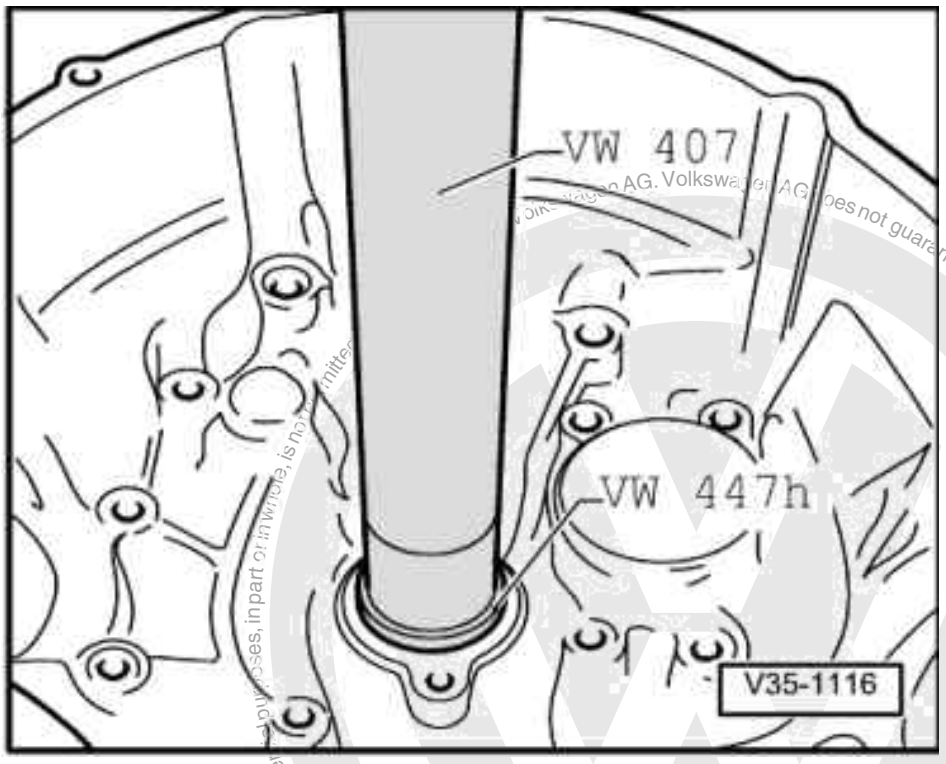

-> Fig.1 Pressing out taper roller bearing outer race

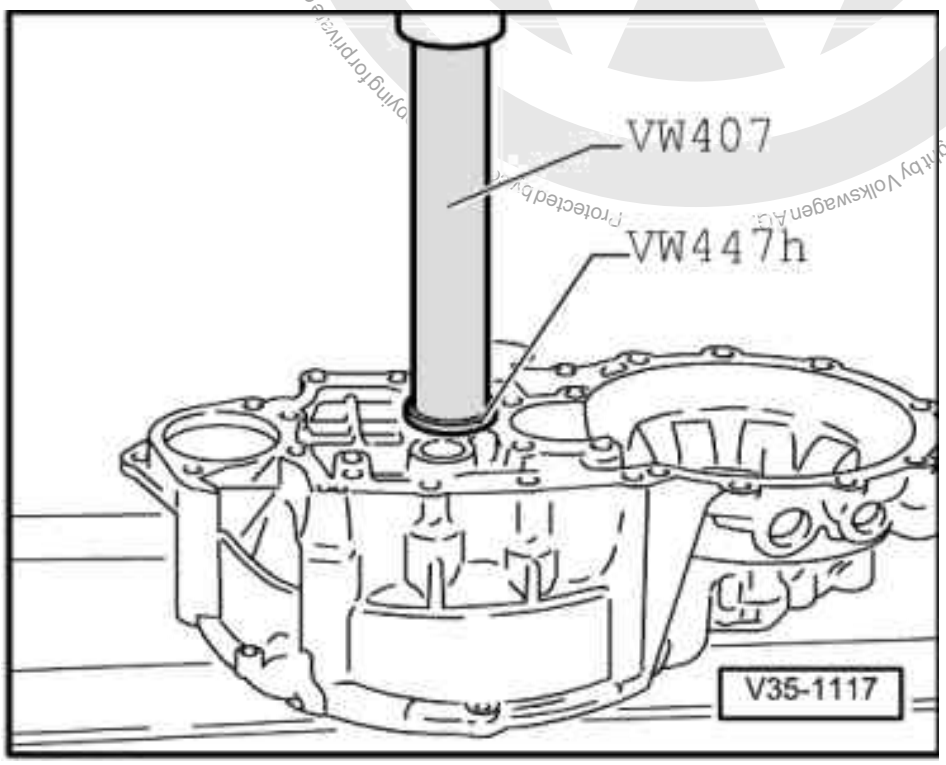

satelettronica

-> Fig.2 Pressing in taper roller bearing outer race

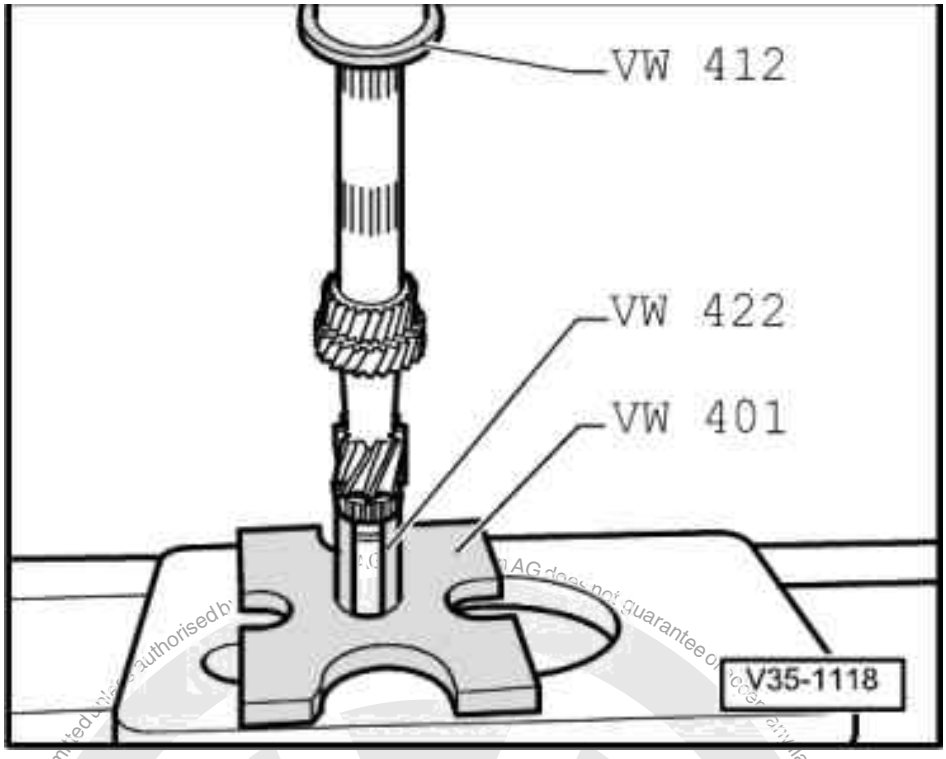

-> Fig.3 Pressing on taper roller bearing inner race

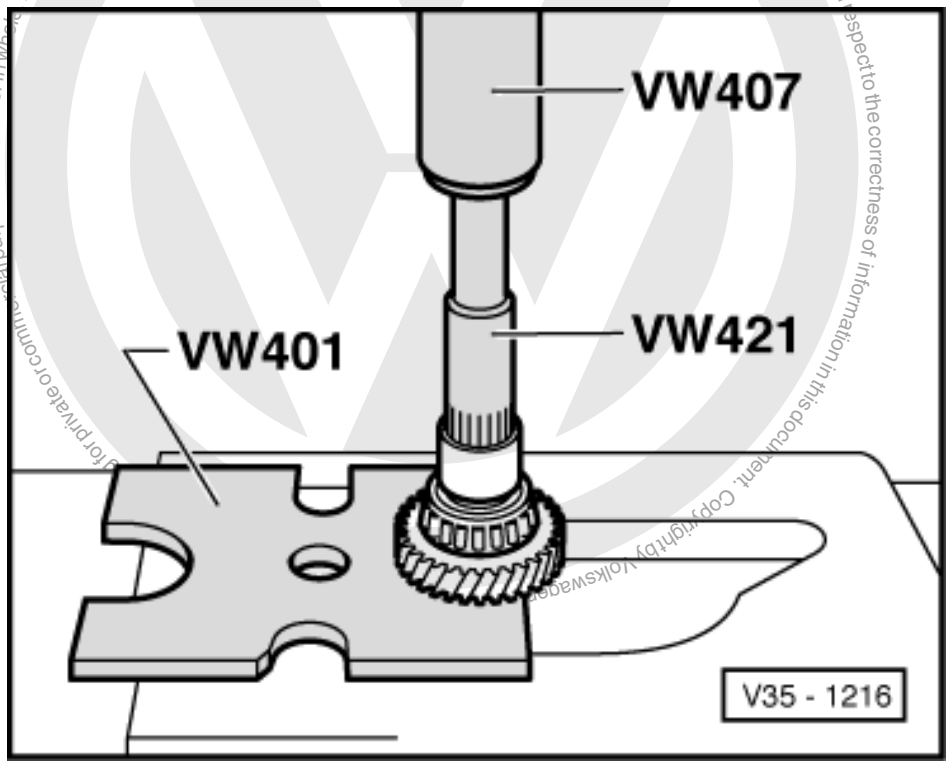

satelettronica

-> Fig.4 Pressing off 4th gear wheel with taper roller bearing and sleeve

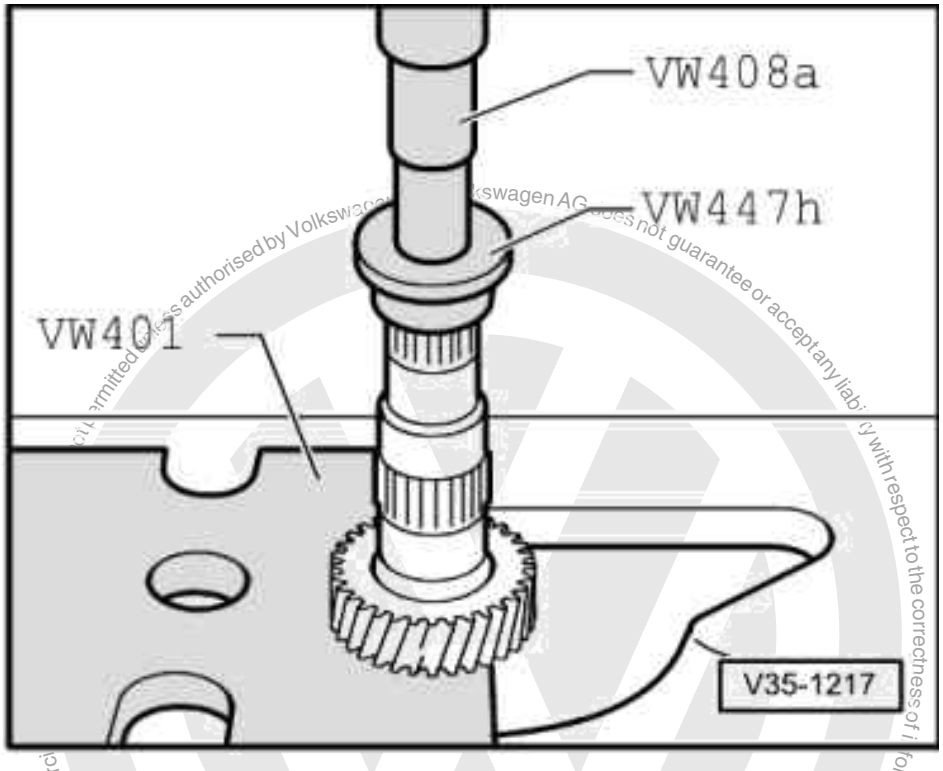

-> Fig.5 Pressing off 3rd gear wheel

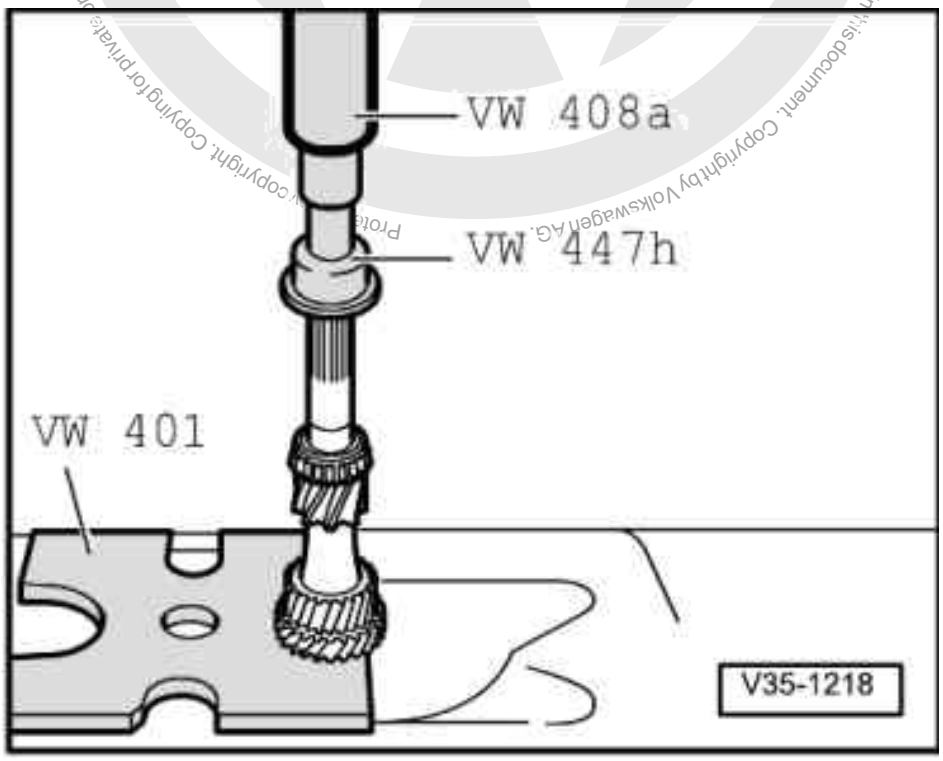

satelettronica

-> Fig.6 Pressing on 3rd gear wheel

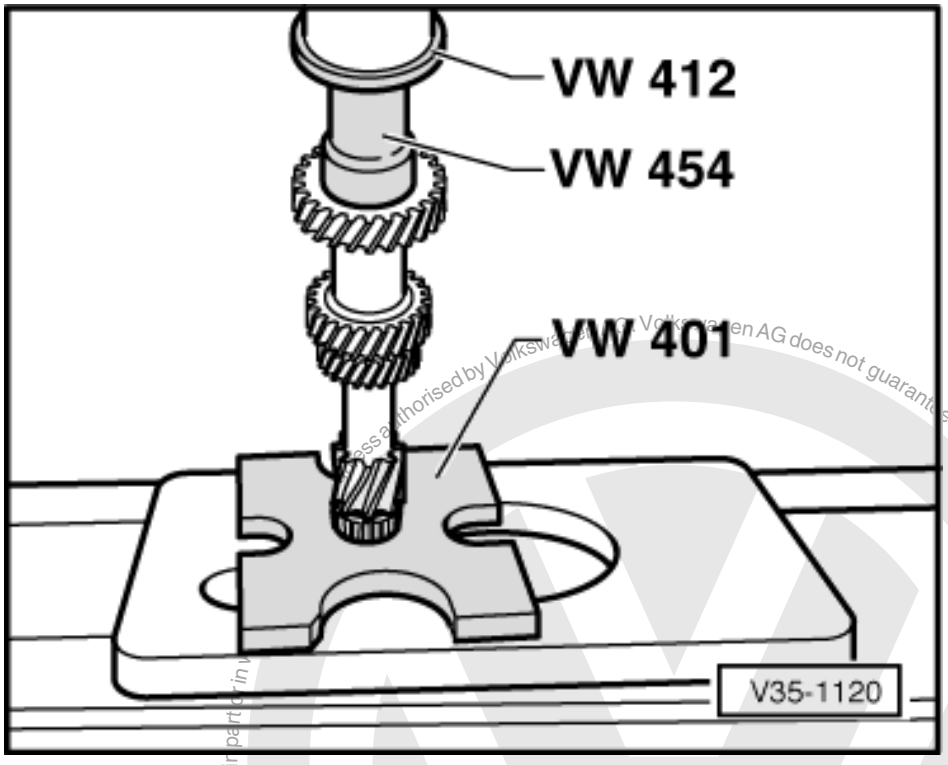

-> Fig.7 Pressing on 4th gear wheel

Shoulder points to 3rd gear.

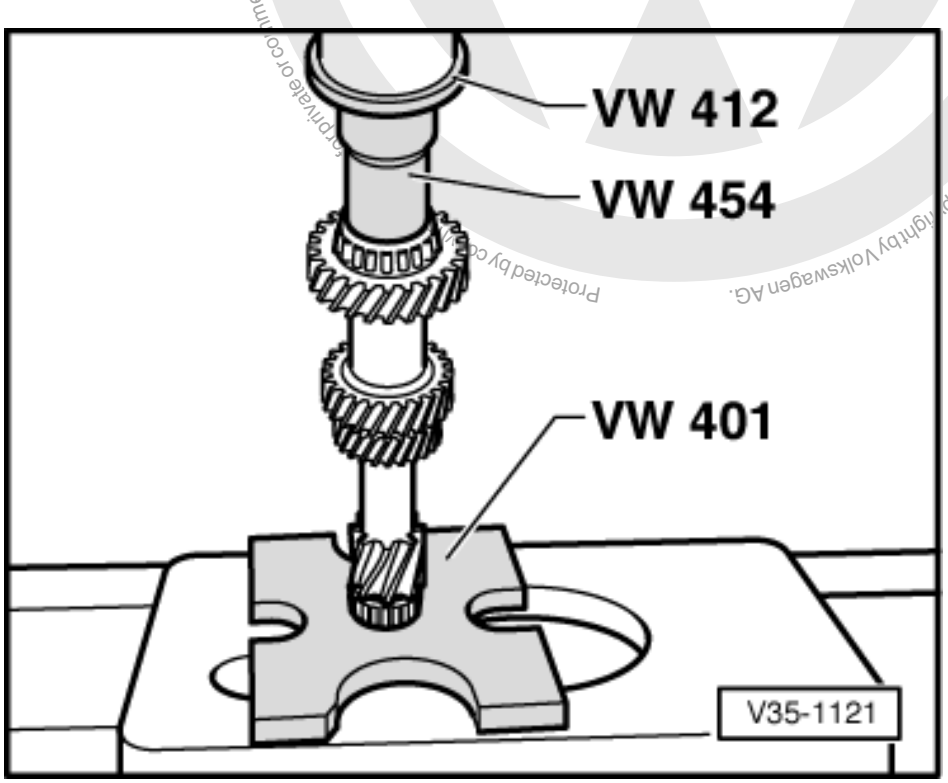

Protected by copyright. Copying for private or commercial purposes, in part or in whole, is not permitted unless authorised by Volkswagen AG. Volkswagen AG does not guarantee or accept any liability with respect to the correctness of information in this document. Copyright by Volkswagen AG.
satelettronica

-> Fig.8 Pressing on taper roller bearing inner race

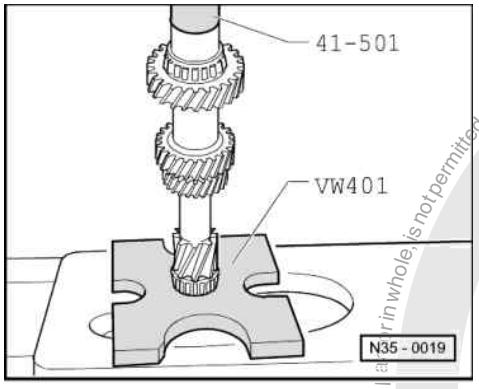

-> Fig.9 Pressing on sleeve for needle roller bearing

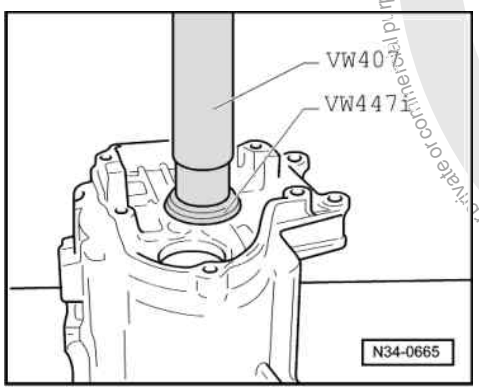

-> Fig.10 Pressing out taper roller bearing outer race

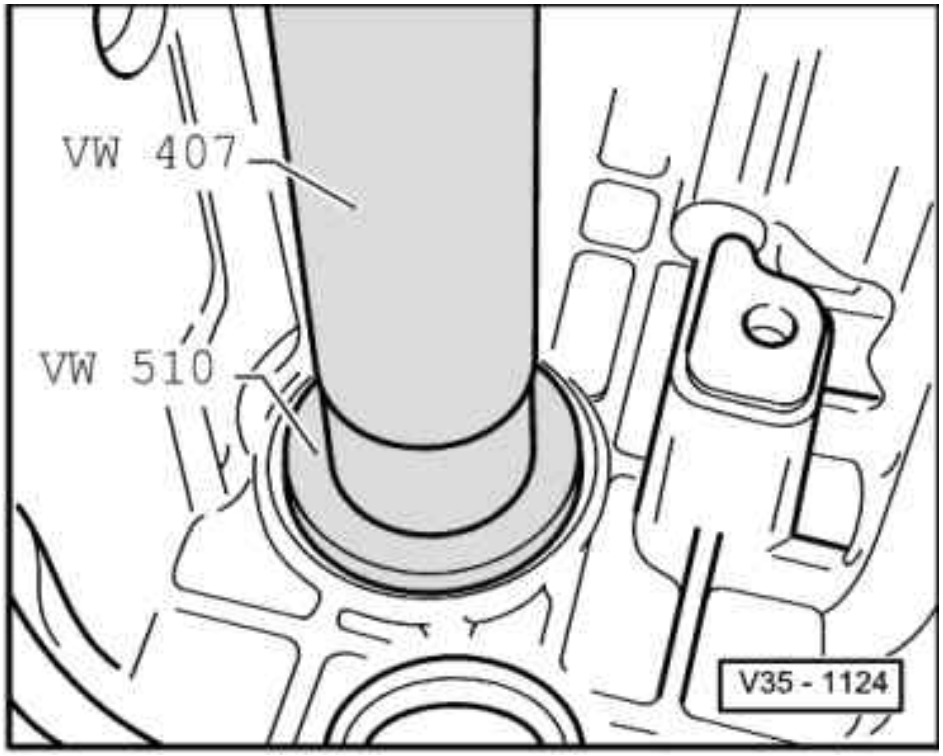

Protected by copyright. Copying for private or commercial purposes, in part or in whole, is not permitted unless authorised by Volkswagen AG. Volkswagen AG does not guarantee or accept any liability with respect to the correctness of information in this document. Copyright by Volkswagen AG.
satelettronica

-> Fig.11 Pressing in taper roller bearing outer race

- Install with shim after adjusting input shaft.

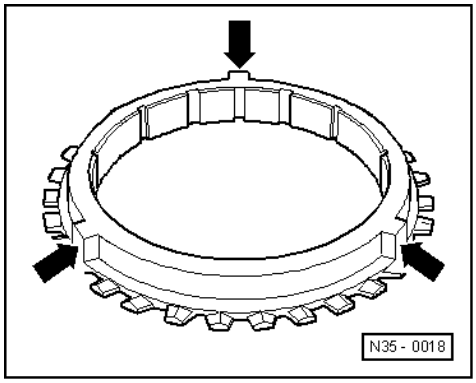

-> Fig.12 5th gear synchro-ring with cast locking pieces (arrows)

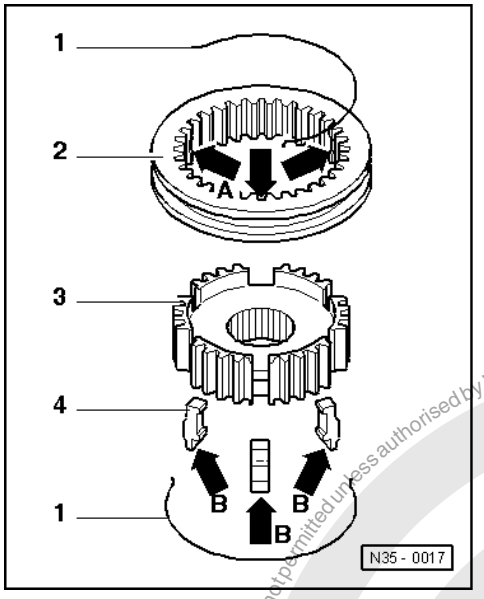

-> Fig.13 5th gear synchronizer

1 - Springs for lock pieces
2 - Locking collar
With 3 recesses (arrows A) for the locking pieces (item 4)
3 - Synchro-hub
4 - Locking pieces
Installation position: The thin extension (arrow B) faces the pointed teeth of the locking collar (item 2)

Protected by copyright. Copying for private or commercial purposes, in whole or in part, is not permitted unless authorised by Volkswagen AG. Volkswagen AG does not guarantee or accept any liability with respect to the correctness of information in this document. Copyright by Volkswagen AG.
satelettronica

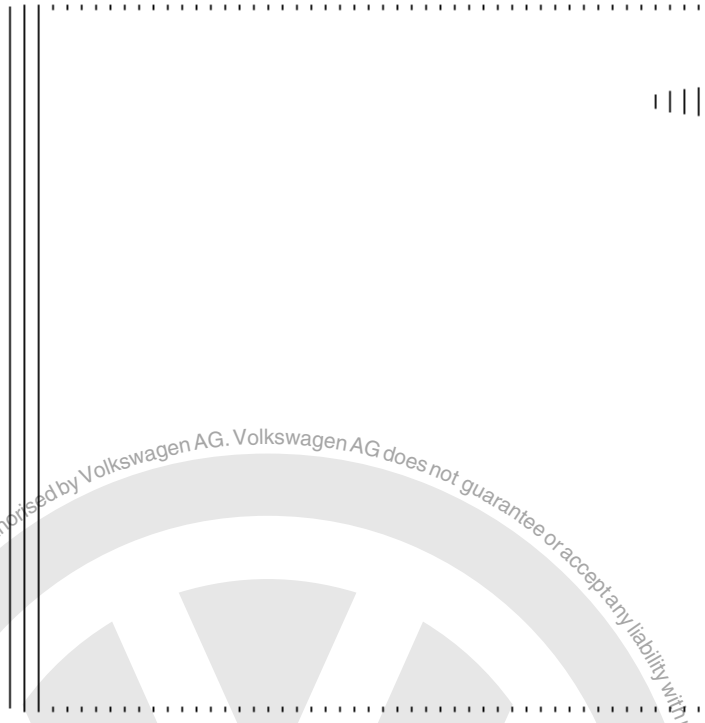

-> Fig.14 Assembling 5th gear locking collar/synchro-hub

- Push locking collar over synchro-hub.

Pointed teeth -A- and shoulder -B- of synchro-hub face in same direction. The recesses for the locking pieces in locking collar and synchro-hub must be aligned (Fig. 13).

- Insert locking pieces (Installation position: Fig. 13).
- Insert springs offset by 120° underneath lug -C-. The angled ends of the spring must be directly behind the locking pieces (arrows).

Protected by copyright. Copying for private or commercial purposes, in part or in whole, is not permitted unless authorised by Volkswagen AG. Volkswagen AG does not guarantee or accept any liability with respect to the correctness of information in this document. Copyright by Volkswagen AG.

satelettronica

2 - Adjusting input shaft

2.1 - Adjusting input shaft

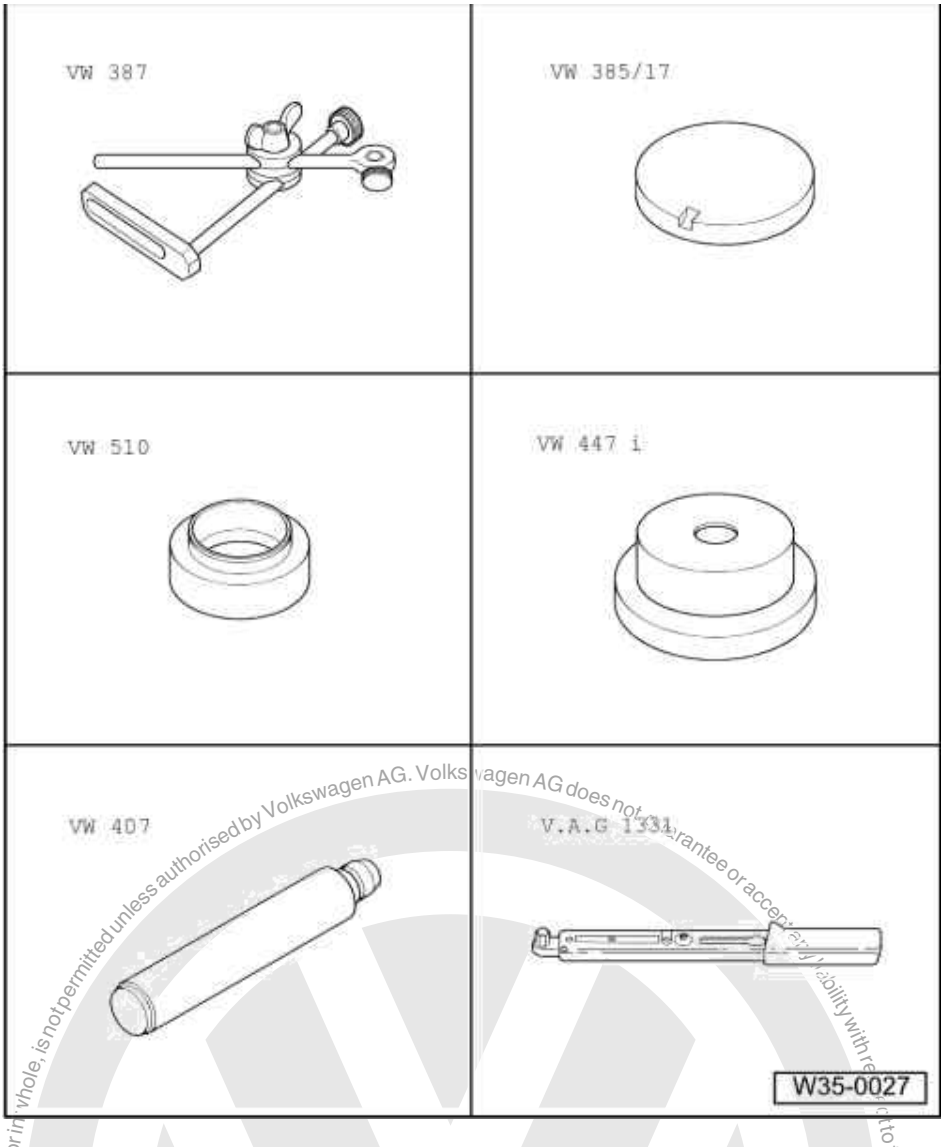

(Determining input shaft adjustment shim)

Special tools and workshop equipment required

- VW 387 Universal dial gauge bracket
- VW 385/17 End measuring plate
- VW 510 Press piece
- VW 447 i Thrust plate
- VW 407 Press tool
- V.A.G 1331 Torque wrench
- Dial gauge

It is only necessary to readjust the input shaft when the following components are renewed:

- Gearbox housing
- Clutch housing
- Input shaft
- 4th gear wheel

Protected by copyright. Copying for private or commercial purposes, in part or in whole, is not permitted unless authorised by Volkswagen AG. Volkswagen AG does not guarantee or accept any liability with respect to the correctness of information in this document. Copyright by Volkswagen AG.

satelettronica

or the

- Taper roller bearings

Adjustment overview => Page 220

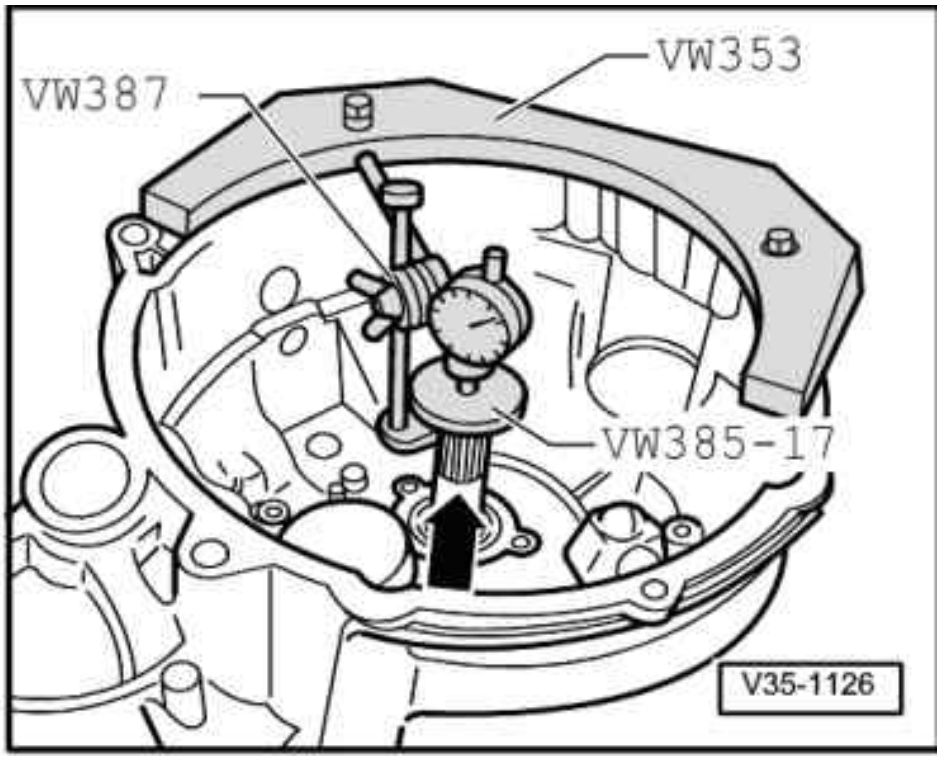

- Press taper roller bearing outer race without shim into gearbox housing onto stop, using VW 510.
- Install input shaft in clutch housing and assemble gearbox housing. Tighten hexagon head bolts to 25 Nm and then turn 90° further.
- -> Fit measuring appliance and D.T.I. in clutch housing (large taper roller bearing in gearbox housing).
- Before taking any measurements, rotate input shaft to allow bearings to settle. Set dial gauge to "O" with 1 mm preload.

satelettronica
Protected by copyright. Copying for private or commercial purposes, in part or in whole, is not permitted unless authorised by Volkswagen AG. Volkswagen AG does not guarantee or accept any liability with respect to the correctness of information in this document. Copyright by Volkswagen AG.

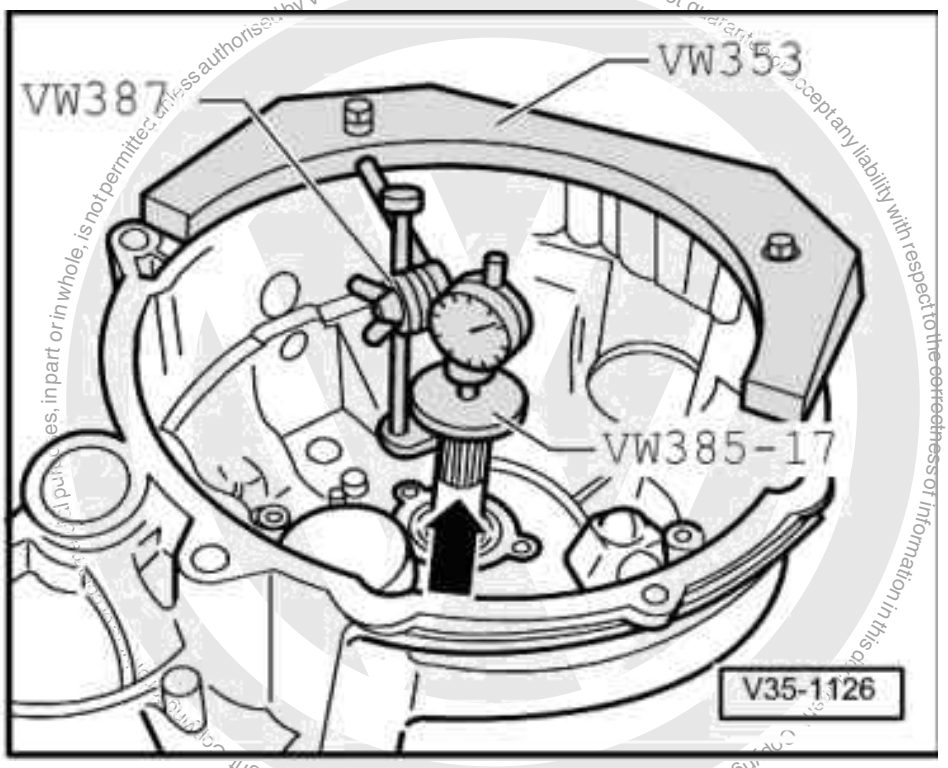

Note:

This preparation is to be repeated for each subsequent measurement, otherwise the gauge will not return to the starting position.

- -> Press input shaft in direction of D.T.I. (arrow).
- Read off and note clearance indicated on D.T.I. (example 1.21).

Note:

D.T.I. does not return to original position.

- Determine thickness of shim from table => Page 162 (example 1.175).

- Remove input shaft and press taper roller bearing outer race out of gearbox housing using VW 447i .
- Press taper roller bearing outer race together with the 1.175 shim into gearbox housing using VW 510.
- Assemble gearbox housing and tighten hexagon head bolts to 25 Nm and then turn 90° further.

2.2 - Table of adjustment shims

Measured	Shim	
bearing clearance (mm)	Thickness (mm)	Part No.
0.671 ... 0.699	0.650	02A 311 140
0.700 ... 0.724	0.675	02A 311 140 A
0.725 ... 0.749	0.700	02A 311 140 B
0.750 ... 0.744	0.725	02A 311 140 C
0.775 ... 0.799	0.750	02A 311 140 D
0.800 ... 0.824	0.775	02A 311 140 E
0.825 ... 0.849	0.800	02A 311 140 F
0.850 ....0.874	0.825	02A 311 140 G
0.875 ... 0.899	0.850	02A 311 140 H

satelettronica

Measured	Shim	
0.900 ... 0.924	0.875	02A 311 140 J
0.925 ... 0.949	0.900	02A 311 140 K
0.950 ... 0.974	0.925	02A 311 140 L
0.975 ... 0.999	0.950	02A 311 140 M
1.000 ... 1.024	0.975	02A 311 140 N
1.025 ... 1.049	1.000	02A 311 140 P
1.050 ... 1.074	1.025	02A 311 140 Q
1.075 ... 1.099	1.050	02A 311 140 R
1.100 ... 1.124	1.075	02A 311 140 S
1.125 ... 1.149	1.100	02A 311 140 T
1.150 ... 1.174	1.125	02A 311 140 AA
1.175 ... 1.199	1.150	02A 311 140 AB

Measured	Shim	
bearing clearance (mm)	Thickness (mm)	Part No.
1.200 ... 1.224	1.175	02A 311 140 AC
1.225 ... 1.249	1.200	02A 311 140 AD
1.250 ... 1.274	1.225	02A 311 140 AE
1.275 ... 1.229	1.250	02A 311 140 AF
1.300 ... 1.324	1.275	02A 311 140 AG
1.325 ... 1.349	1.300	02A 311 140 02A 311 140
1.350 ... 1.374	1.325	02A 311 140 02A 311 140 A
1.375 ... 1.399	1.350	02A 311 140 A 02A 311 140 A
1.400 ... 1.424	1.375	02A 311 140 A 02A 311 140 B
1.425 ... 1.449	1.400	02A 311 140 B 02A 311 140 B
1.450 ... 1.474	1.425	02A 311 140 B 02A 311 140 C
1.475 ... 1.499	1.450	02A 311 140 C 02A 311 140 C
1.500 ... 1.524	1.475	02A 311 140 C 02A 311 140 D

Measured	Shim	
bearing clearance (mm)	Thickness (mm)	Part No.
1.525 ... 1.549	1.500	02A 311 140 D 02A 311 140 D
1.550 ... 1.574	1.525	02A 311 140 D 02A 311 140 E
1.575 ... 1.599	1.550	02A 311 140 E 02A 311 140 E
1.600 ... 1.624	1.575	02A 311 140 E 02A 311 140 F
1.625 ... 1.649	1.600	02A 311 140 F 02A 311 140 F
1.650 ... 1.674	1.625	02A 311 140 F 02A 311 140 G
1.675 ... 1.699	1.650	02A 311 140 G 02A 311 140 G
1.700 ... 1.724	1.675	02A 311 140 G 02A 311 140 H
1.725 ... 1.749	1.700	02A 311 140 H 02A 311 140 H

Copyright by Volkswagen AG. Volkswagen AG does not guarantee or accept any liability with respect to the correctness of information in this document. Copyright by Volkswagen AG. Copying for private or commercial purposes, in part or in whole, is not permitted unless authorised by Volkswagen AG.
satelettronica

Measured	Shim	
1.750 ... 1.774	1.725	02A 311 140 H 02A 311 140 J
1.775 ... 1.791	1.750	02A 311 140 J 02A 311 140 J

2.3 - Performing measurement check

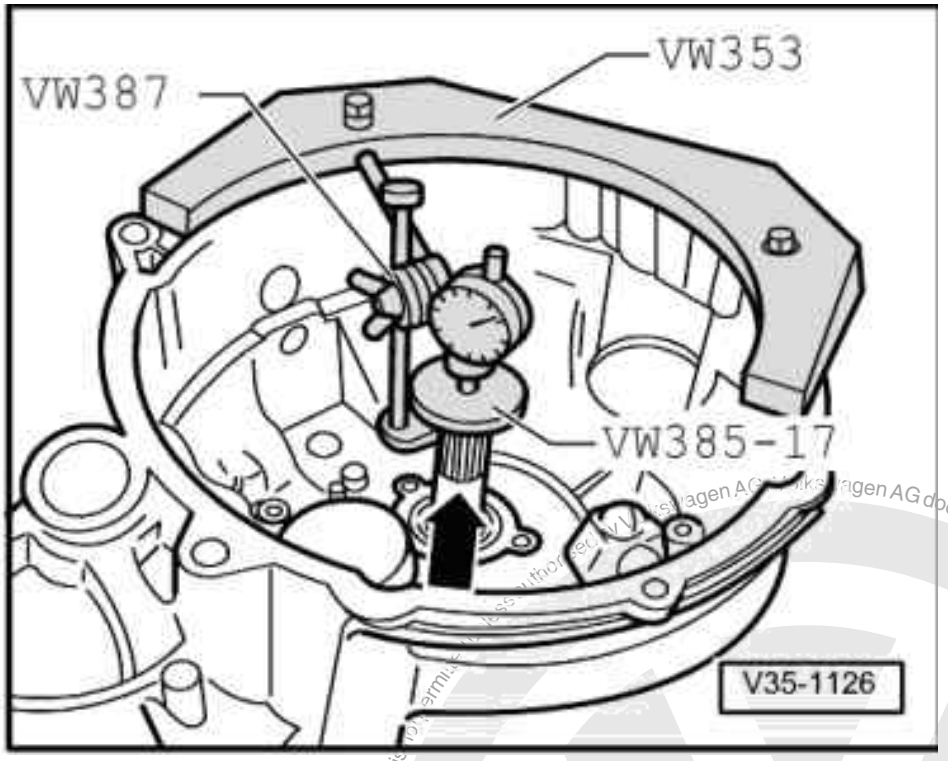

- -> Install measuring appliance and dial gauge
- Rotate input shaft so that the taper roller bearings settle.
- Press input shaft in direction of arrow.
- Bearing play should be min. 0.01 ... max. 0.09 mm.

Note:

If the bearing clearance cannot be measured, but input shaft play is perceptible and the input shaft turns freely, the adjustment is acceptable.

Protected by copyright. Copying for private or commercial purposes, in part or in whole is not permitted unless authorised by Volkswagen AG. Volkswagen AG does not guarantee or accept any liability with respect to the correctness of information in this document. Copyright by Volkswagen AG.
satelettronica

3 - Dismantling and assembling output shaft

3.1 - Dismantling and assembling output shaft

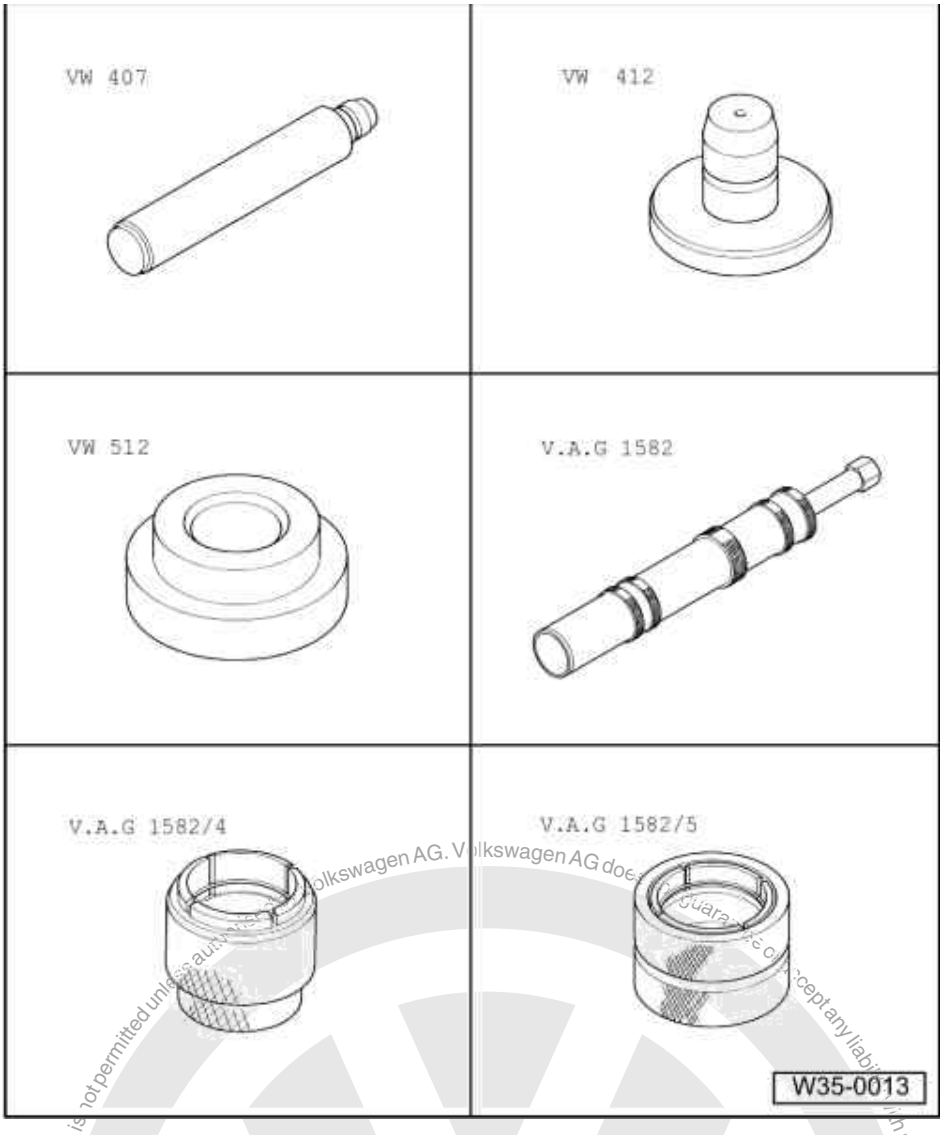

Special tools and workshop equipment required

- VW 407 Press tool
- VW 412 Press tool
- VW 512 Press disk
- V.A.G 1582 Puller
- V.A.G 1582/4 Grip piece
- V.A.G 1582/5 Grip piece

Protected by copyright. Copying for private or commercial purposes, in whole, is not permitted unless authorised by Volkswagen AG. Volkswagen AG does not guarantee or accept any liability with respect to the correctness of information in this document. Copyright by Volkswagen AG.

satelettronica

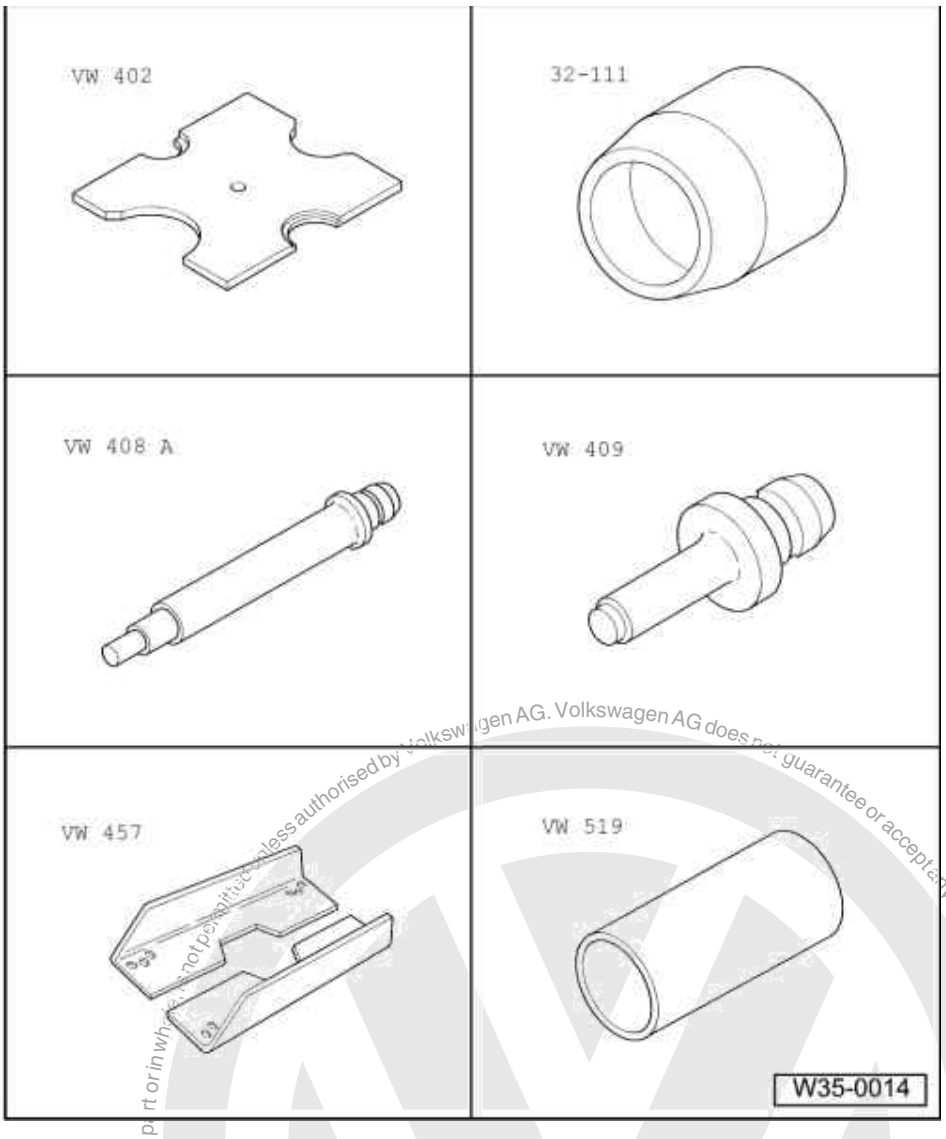

Special tools and workshop equipment required

- VW 402 Thrust plate
- 32-111 Thrust piece
- VW 408 A Press tool
- VW 407 Press tool
- VW 457 Support rails
- VW 519 Tube

Protected by copyright. Copying for private or commercial purposes, in part or in whole, is not permitted unless authorised by Volkswagen AG. Volkswagen AG does not guarantee or accept any liability with respect to the correctness of information in this document. Copyright by Volkswagen AG.
satelettronica

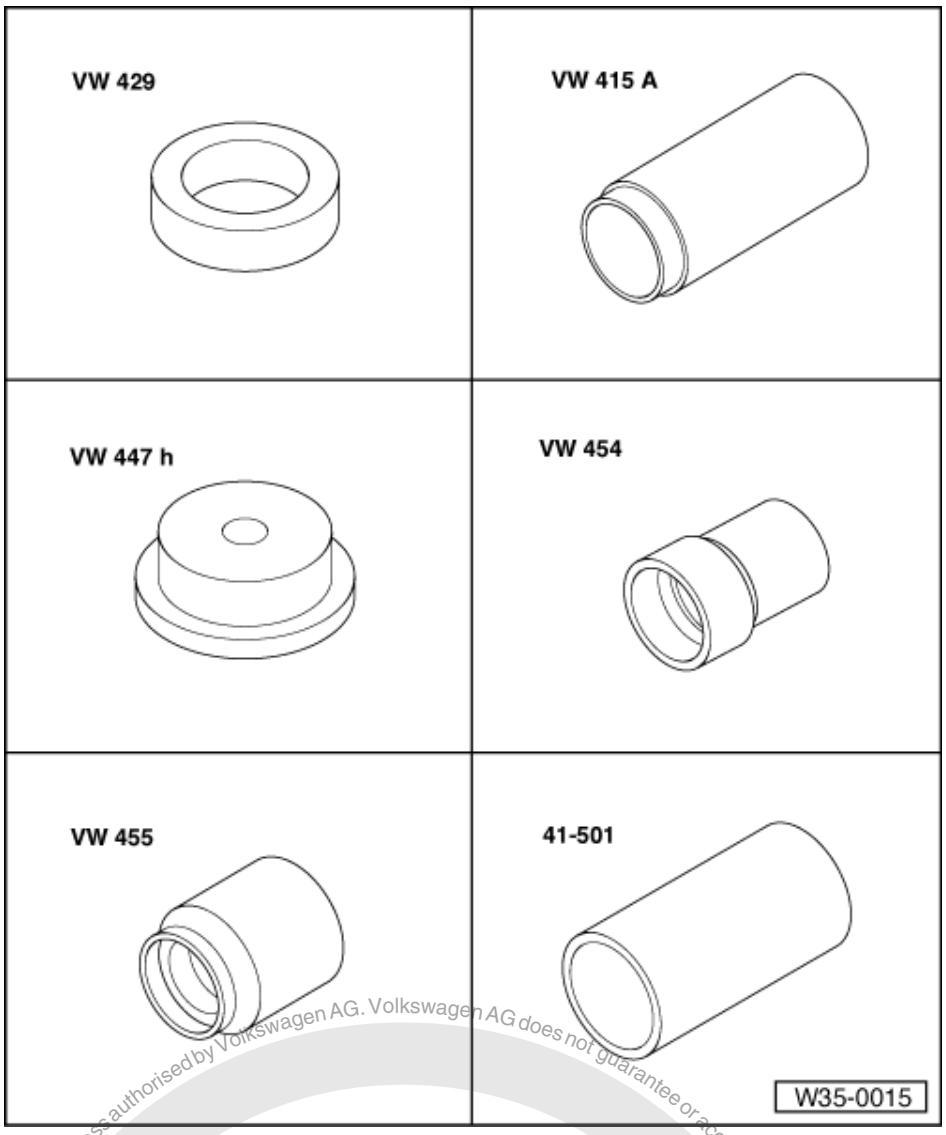

Special tools and workshop equipment required

- VW 429 Thrust ring
- VW 415 A Tube
- VW 447 H Press plate
- VW 454 Press piece
- VW 455 Fitting sleeve
- 41-501 Drift sleeve

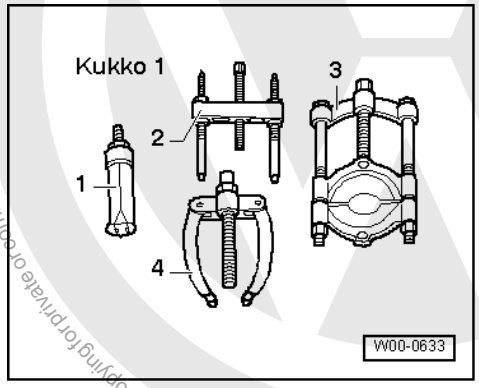

satelettronica
Protected by copyright. Copying for private or commercial purposes, in part or in whole, is not permitted unless authorised by Volkswagen AG. Volkswagen AG does not guarantee or accept any liability with respect to the correctness of information in this document. Copyright by Volkswagen AG.

Special tools and workshop equipment required

- 1 - Internal puller Kukko 21/6
- 4 - Kukko 22/2 Counter support

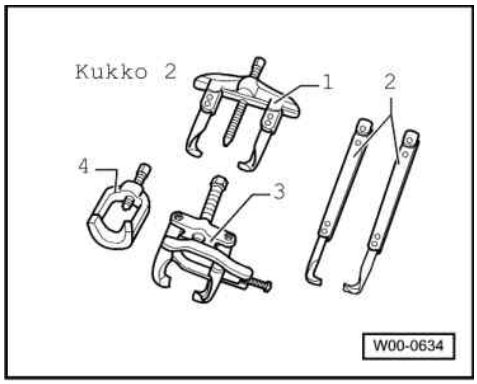

- 1 - Two-arm puller Kukko 20/10

With 250 mm long hooks

Protected by copyright. Copying for private or commercial purposes, in part or in whole, is not permitted unless authorised by Volkswagen AG. Volkswagen AG does not guarantee or accept any liability with respect to the correctness of information in this document. Copyright by Volkswagen AG.

satelettronica

Protected by copyright. Copying for private or commercial purposes, in part or in whole, is not permitted unless authorised by Volkswagen AG. Volkswagen AG does not guarantee or accept any liability with respect to the correctness of information in this document. Copyright by Volkswagen AG.

Notes:

- The output shaft is dismantled as follows:
  - Position separating device under 2nd gear wheel (item 19) and press off as described in Fig. 5.
  - Remove circlip (item 15).
  - Position two-arm puller under bearing support (item 9) and pull off locking collar with 1st and 2nd gear synchro-hub as described in Fig. 6 .
- When installing new gears or a new output shaft consult technical data =>Page 2 .
- Both taper roller bearings must be renewed together as a set.

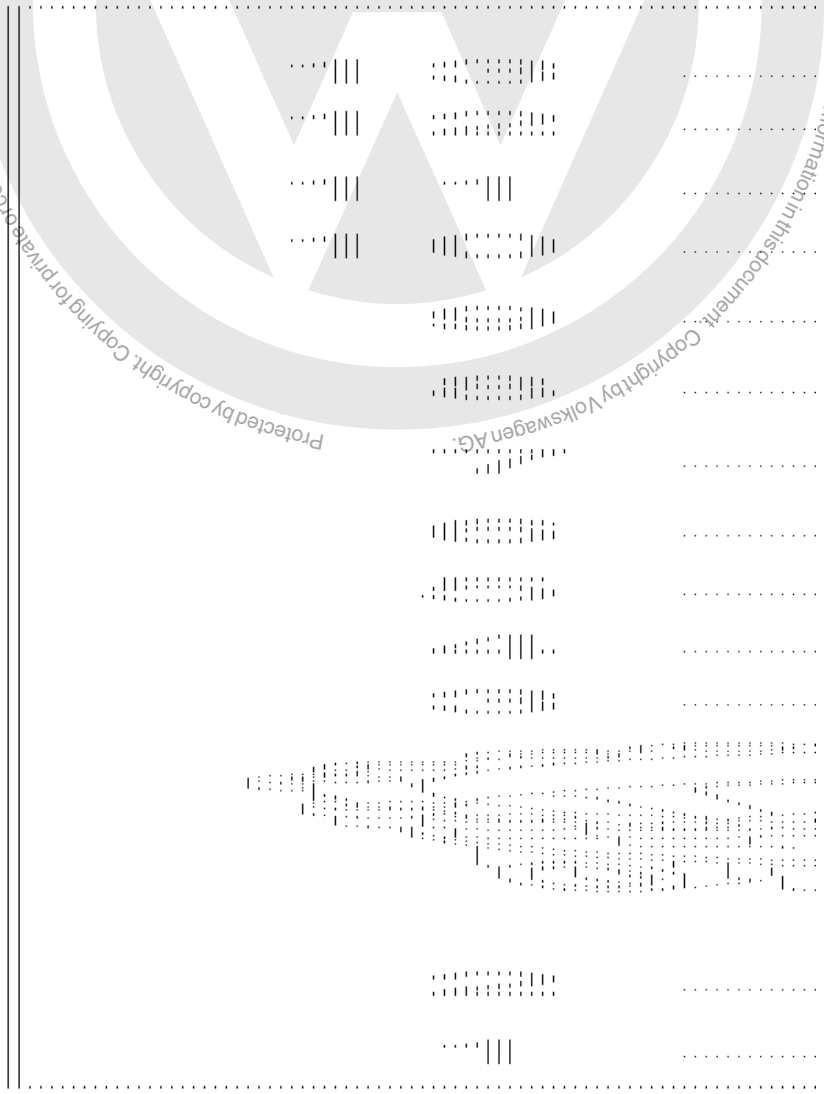

1 Hexagon nut, 25 Nm and then turn 90°further
- 4 nuts for bearing support

2 Clutch housing

3 Shim
- For output shaft
- Adjustment overview => Page 220

4 Small taper roller bearing outer race
- Removing => Fig. 1
- Pressing in => Fig. 2

5 Small taper roller bearing inner race
- Pulling off => Fig. 3
- Pressing on => Fig. 4

satelettronica

6 Output shaft
- Is paired with final drive gear, always renew together as a set
- Adjusting => Page 195

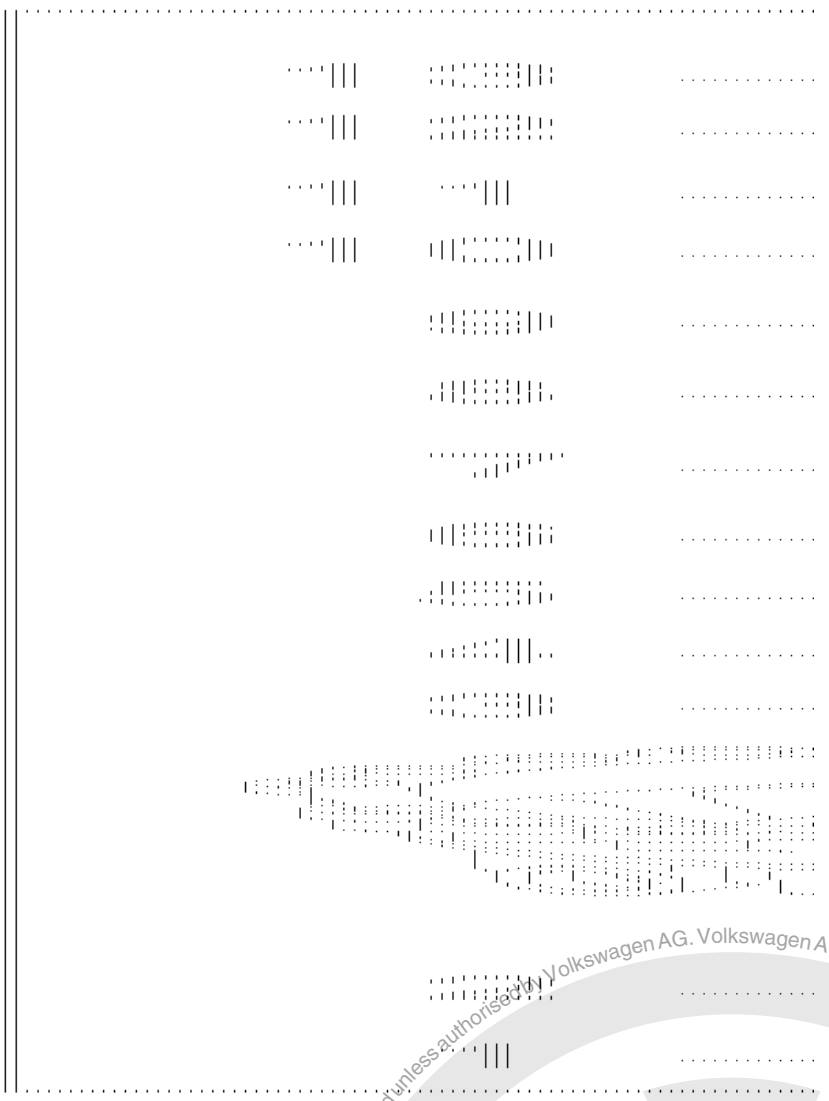

7 Large taper roller bearing inner race
- Pulling off => Fig. 7
- Pressing on => Fig. 8

8 Sealing ring
- Place sealing rings (Qty. 4) on the bearing support bolts

9 Bearing support
- With large taper roller bearing outer race and bolts
- Only change outer race together with large taper roller bearing and bearing support

10 Thrust washer
- Shoulder on thrust washer faces taper roller bearing

11 1st selector gear

Protected by copyright. Copying for private or commercial purposes, in part or in whole, is not permitted unless authorised by Volkswagen AG. Volkswagen AG does not guarantee or accept any liability with respect to the correctness of information in this document. Copyright by Volkswagen AG.
satelettronica

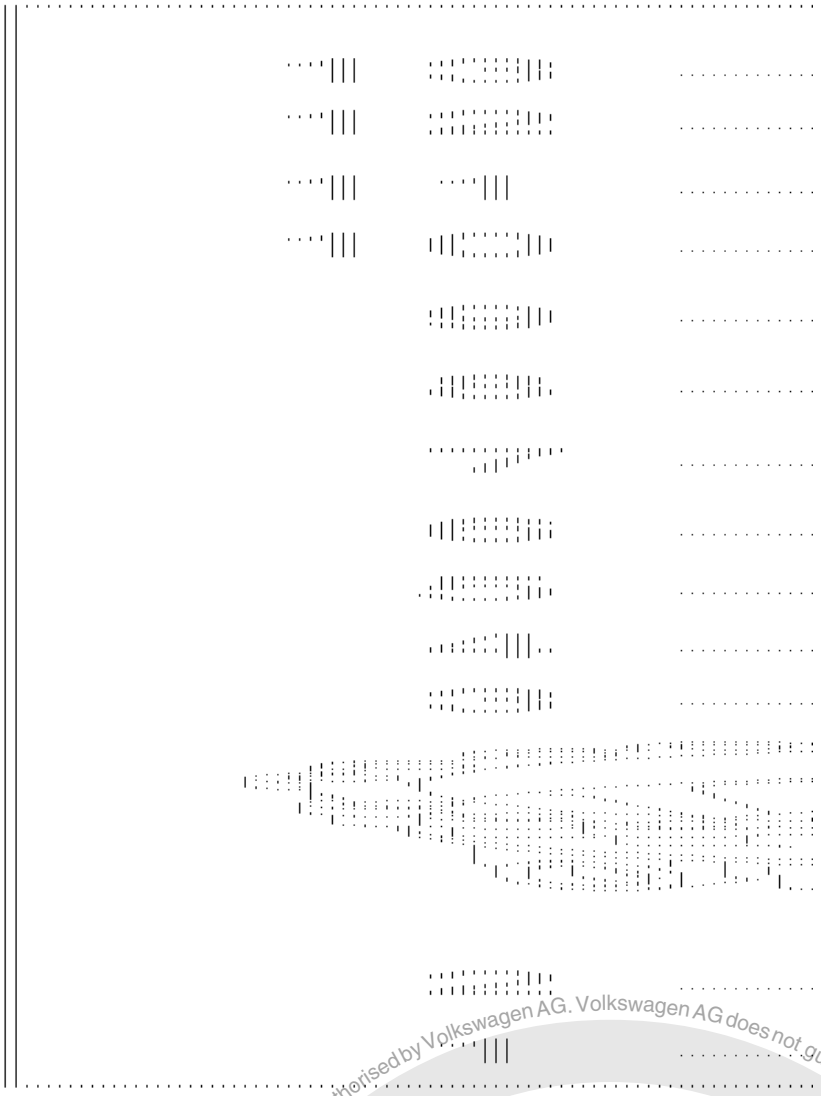

12 Needle roller bearing
- For 1st gear

13 1st gear synchro-ring
- Checking for wear => Fig. 9
- Identification => Fig. 14
- From gearbox build date 04 09 0 the synchronisation for the 1st gear has been modified =>Page 191

14 1st and 2nd gear locking collar with synchro-hub
- Pull off with bearing support after removing the circlip (item 15) => Fig. 6
- Dismantling => Fig. 10
- Assembling locking collar/synchro hub => Fig. 10 and Fig. 11
- Installation position => Fig. 12
- Pressing on => Fig. 13
- From gearbox build date 04 09 0 the synchronisation for the 1st gear has been modified =>Page 191

Protected by copyright. Copying for private or commercial purposes, in part or in whole, is not permitted unless authorised by Volkswagen AG. Volkswagen AG does not guarantee or accept any liability with respect to the correctness of information in this document. Copyright by Volkswagen AG.
satelettronica

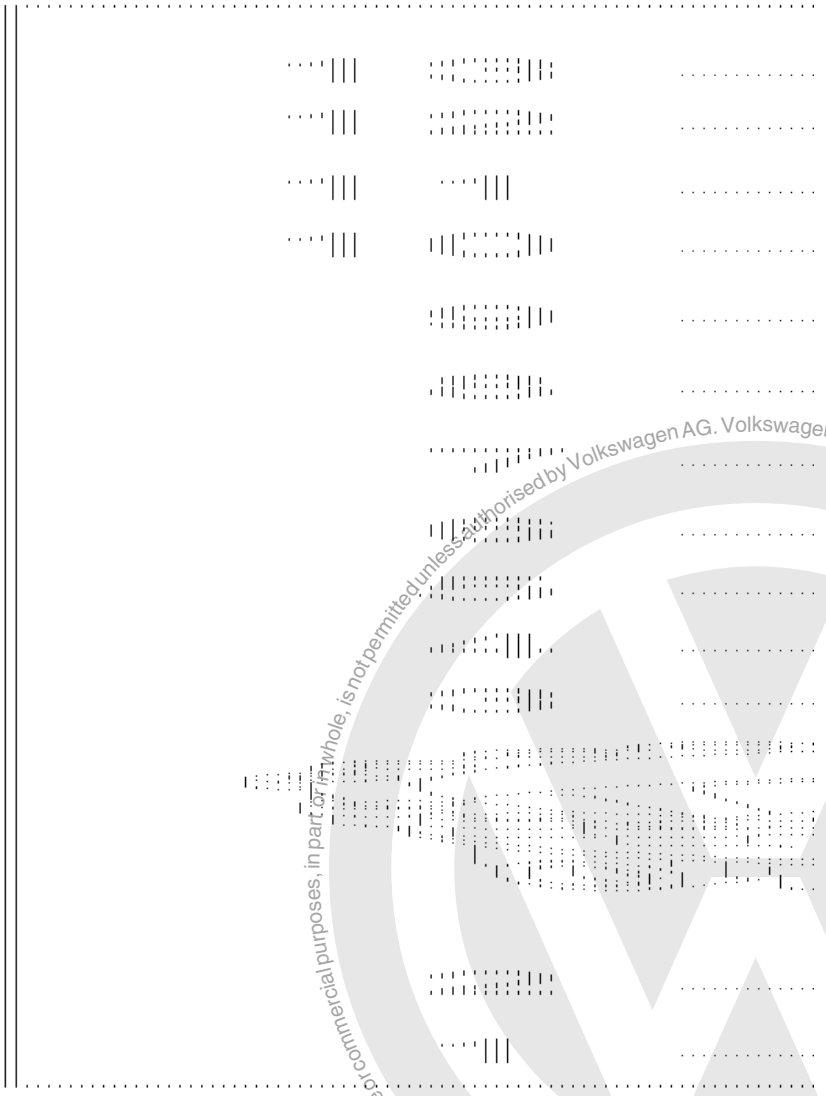

15 Securing clip

16 2nd gear synchro-ring

- Identification => Fig. 14
- Checking for wear
  => Fig. 16
- Assemble so that the recesses locate in the locking collar (item 14) locking pieces

17 Outer ring

- Insert in the synchro-ring (item 16). Installation position => Fig. 17
- Renew if scored

18 Synchro-ring

- (Inner ring)
- Checking for wear
  => Fig. 18
- Check lugs for scoring
- Installation position => Fig. 19

Protected by copyright. Copyright by Volkswagen AG.
Copyright by Volkswagen AG. Volkswagen AG does not guarantee or accept any liability with respect to the correctness of information in this document.
Copying for private or commercial purposes, in part or in whole, is not permitted unless authorised by Volkswagen AG.
satelettronica

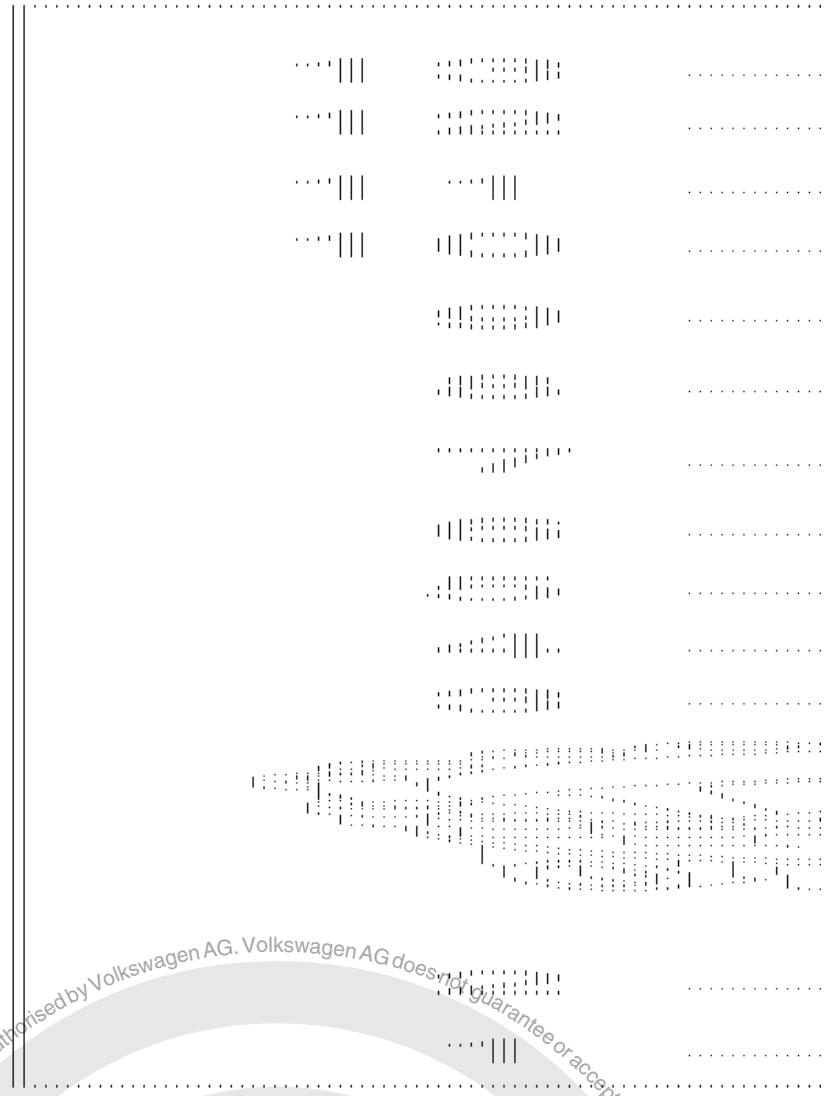

19 2nd gear
- Installation position => Fig. 20

20 Needle roller bearing
- For 2nd gear

21 Thrust washer

22 Sleeve for 3rd gear needle roller bearing
- Pressing off with 2nd gear wheel => Fig. 5
- Pressing on => Fig. 21

23 Needle roller bearing
- For 3rd gear

24 Selector gear for 3rd gear

25 3rd gear synchro-ring
- Checking for wear => Fig. 9

Protected by copyright. Copying for private or commercial purposes, in part or in whole, is not permitted unless authorised by Volkswagen AG. Volkswagen AG does not guarantee or accept any liability with respect to the correctness of information in this document. Copyright by Volkswagen AG.

satelettronica

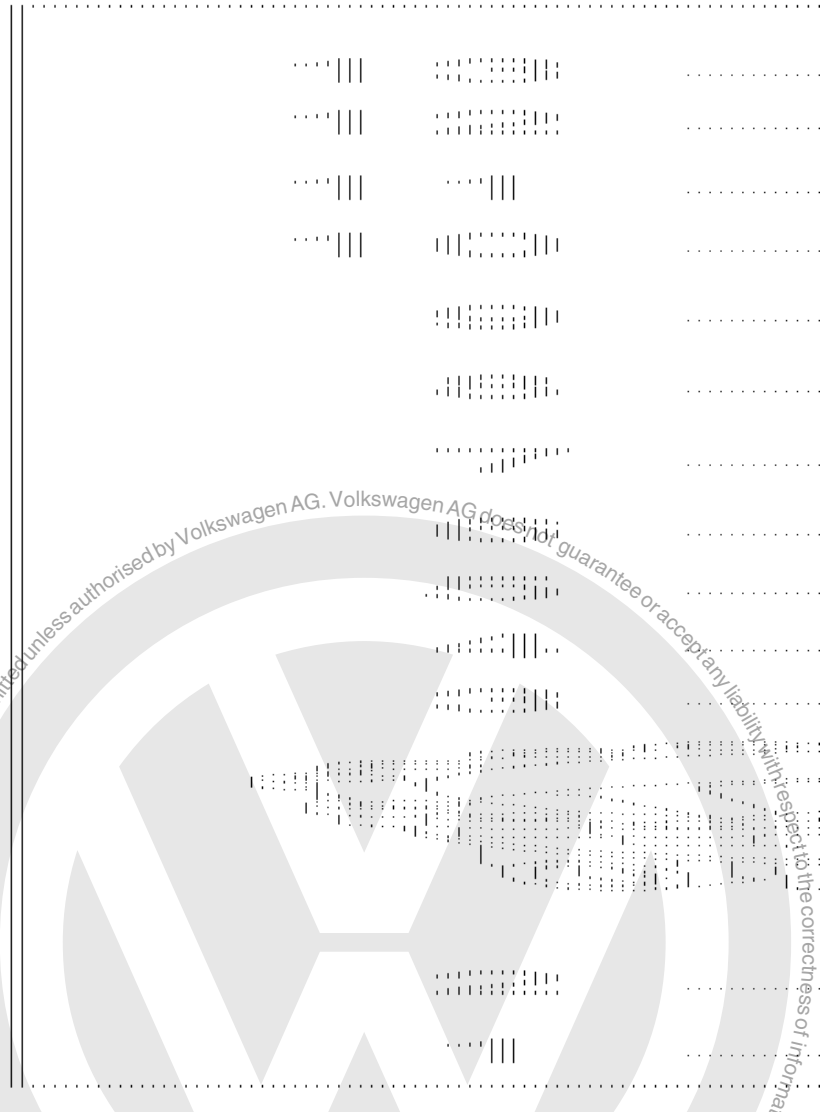

26 Locking collar with 3rd and 4th gear synchro-hub

- Press off with 2nd gear wheel (item 19) and 3rd gear wheel (item 24) => Fig. 5
- Dismantling => Fig. 22
- Installation position locking collar/synchro-hub => fig. 24
- Assembling locking collar/synchro-hub => Fig. 22 and Fig. 23
- Pressing on => Fig. 25

27 Sleeve

- For needle roller bearing
- Press off with locking collar and 3rd and 4th gear synchro-hub (item 26) => Fig. 5
- Pressing on => Fig. 26

28 Needle roller bearing

- For 4th gear

Copyright by Volkswagen AG. Volkswagen AG does not guarantee or accept any liability with respect to the correctness of information in this document. Copyright by Volkswagen AG. Protected by copyright. Copying for private or commercial purposes, in part or in whole, is not permitted unless authorised by Volkswagen AG.
satelettronica

Protected by copyright. Copying for private or commercial purposes, in part or in whole, is not permitted unless authorised by Volkswagen AG. Volkswagen AG does not guarantee or accept any liability with respect to the correctness of information in this document. Copyright by Volkswagen AG.

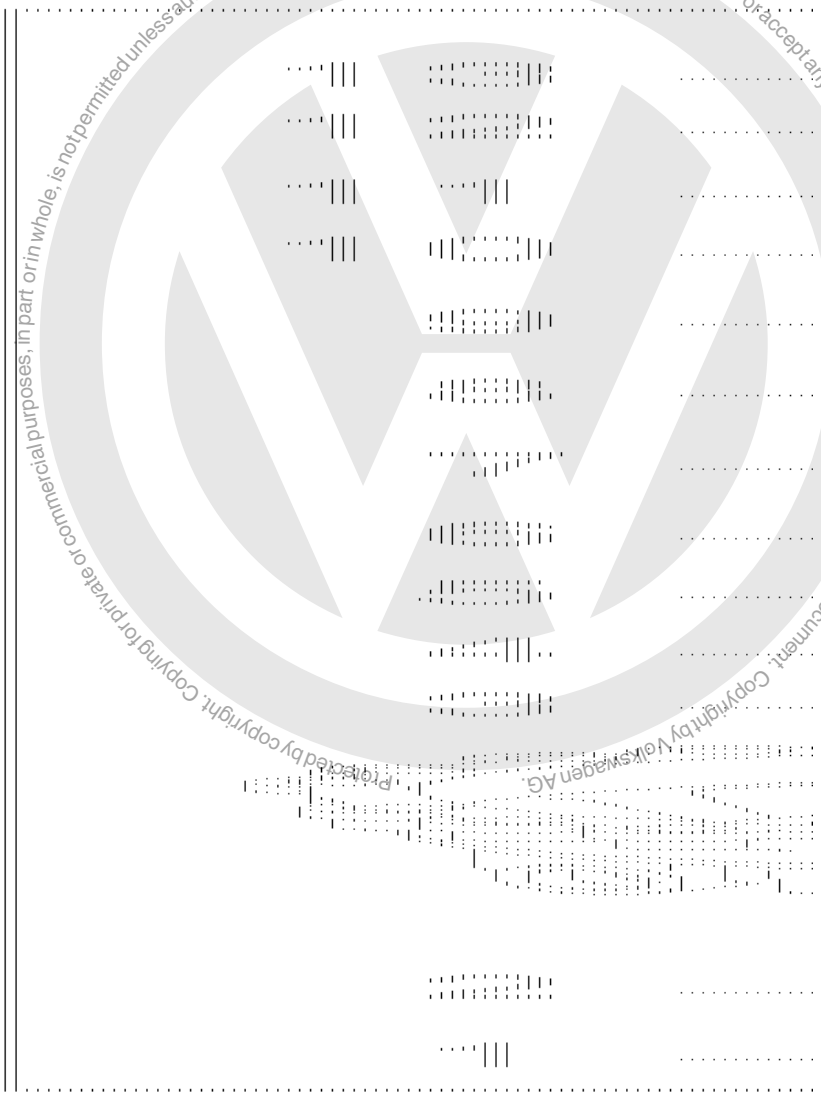

29 4th gear synchro-ring
- Checking for wear
  => Fig. 9

30 Selector gear for 4th gear

31 Thrust washer

32 Needle roller bearing
- For output shaft
- Removing and installing
  => Page 125

33 Gearbox housing

34 Sleeve
- For output shaft needle roller bearing
- Pressing off => Fig. 5
- Pressing on => Fig. 27

35 5th gear
- Removing and installing
  => Page 100

satelettronica

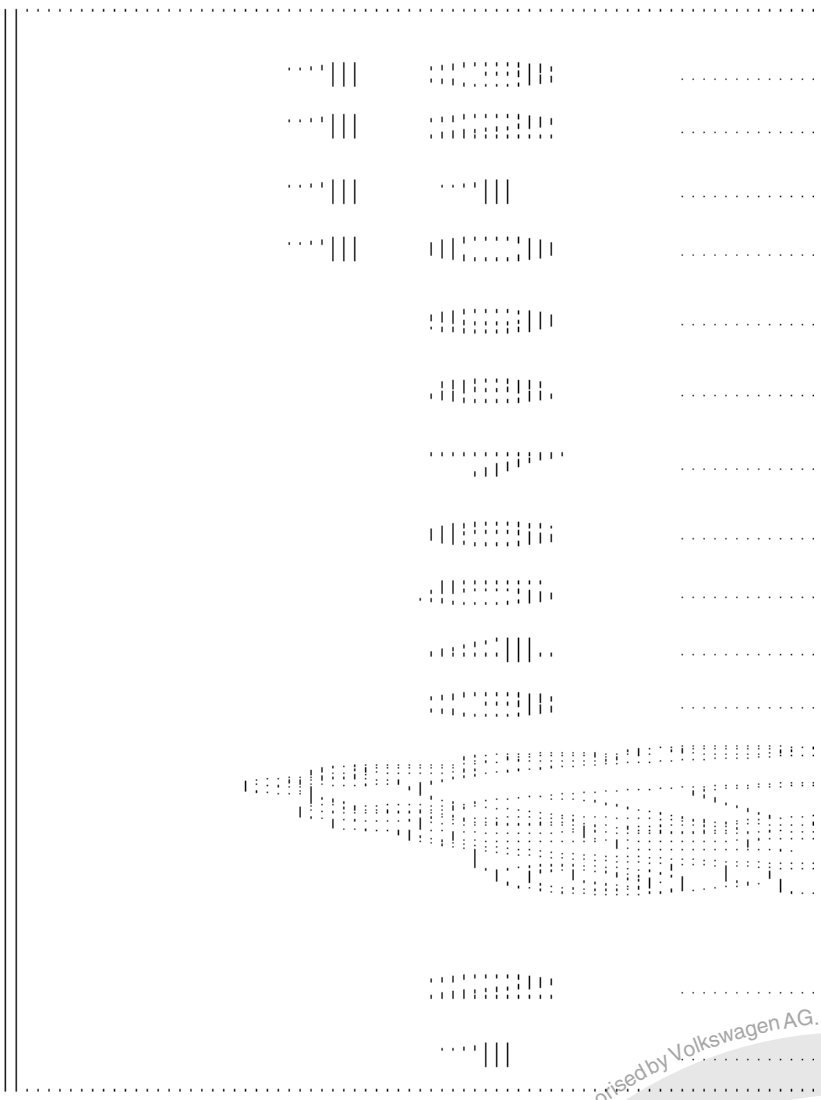

36 Dished spring

- Installation position => Page 116

37 Torx socket head bolt M10, 80 Nm

- Fitted portion on bolt head holds saucer spring washer in position

satelettronica
Protected by copyright. Copying for private or commercial purposes, in part or in whole, is not permitted unless authorised by Volkswagen AG. Volkswagen AG does not guarantee or accept any liability with respect to the correctness of information in this document. Copyright by Volkswagen AG.

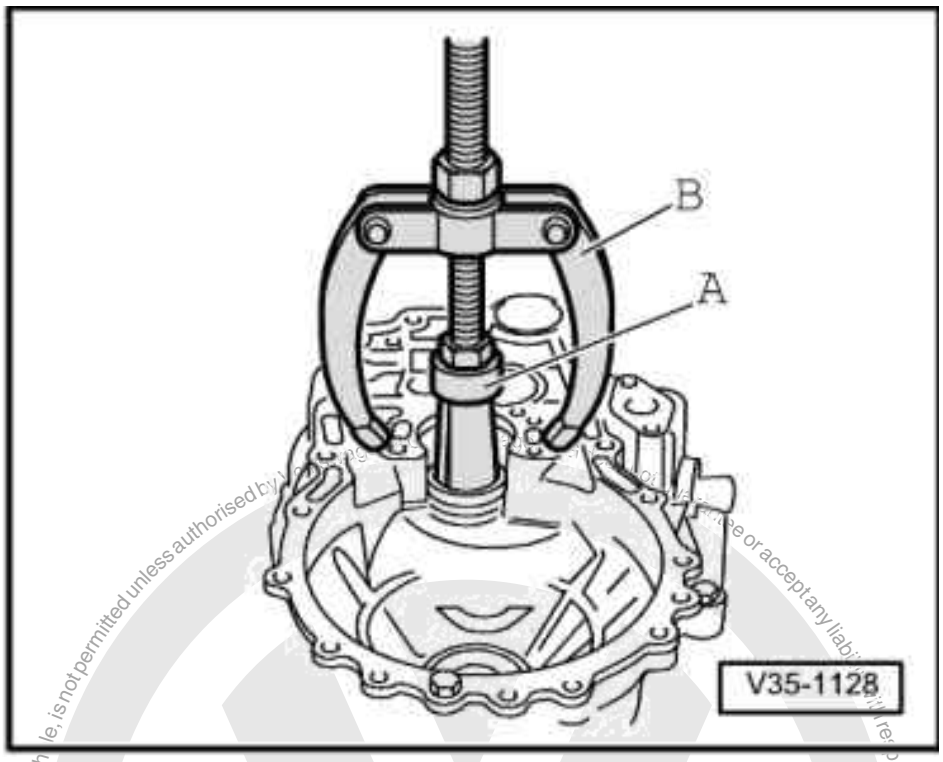

-> Fig.1 Pulling out small taper roller bearing outer race

A - Internal extractor 37 ... 46 mm, e.g. Kukko 21/6

B - Counter support, e.g. Kukko 22/2

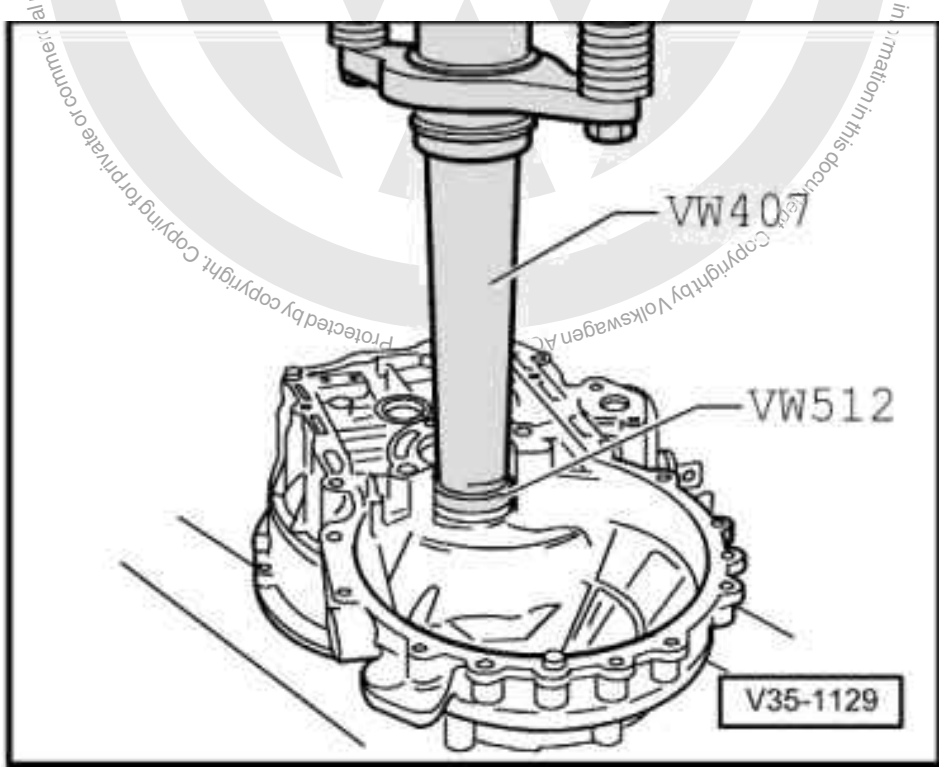

satelettronica

-> Fig.2 Pressing in small taper roller bearing outer race

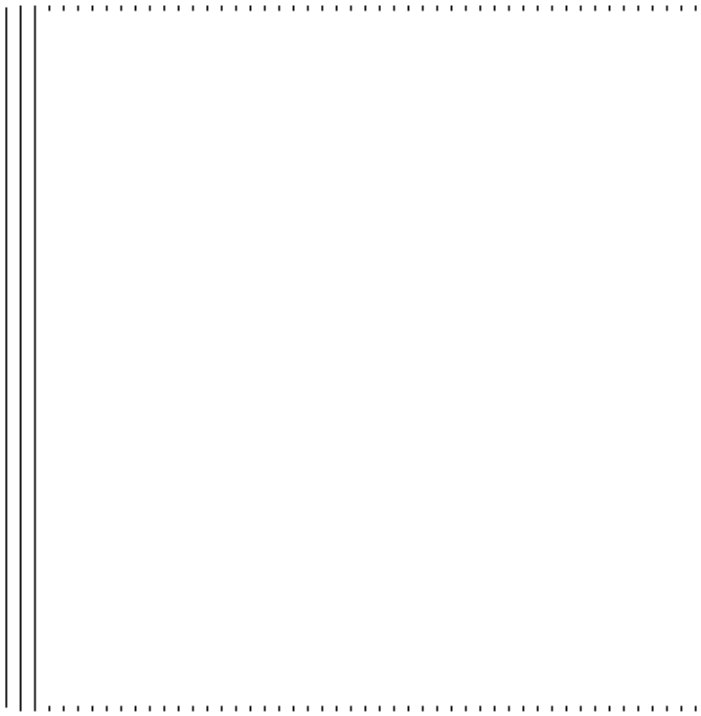

-> Fig.3 Pulling off small taper roller bearing inner race

A - Vice clamps/vice

- Fit gripping device and tension behind bearing rollers, then turn bearing and retension gripping device.

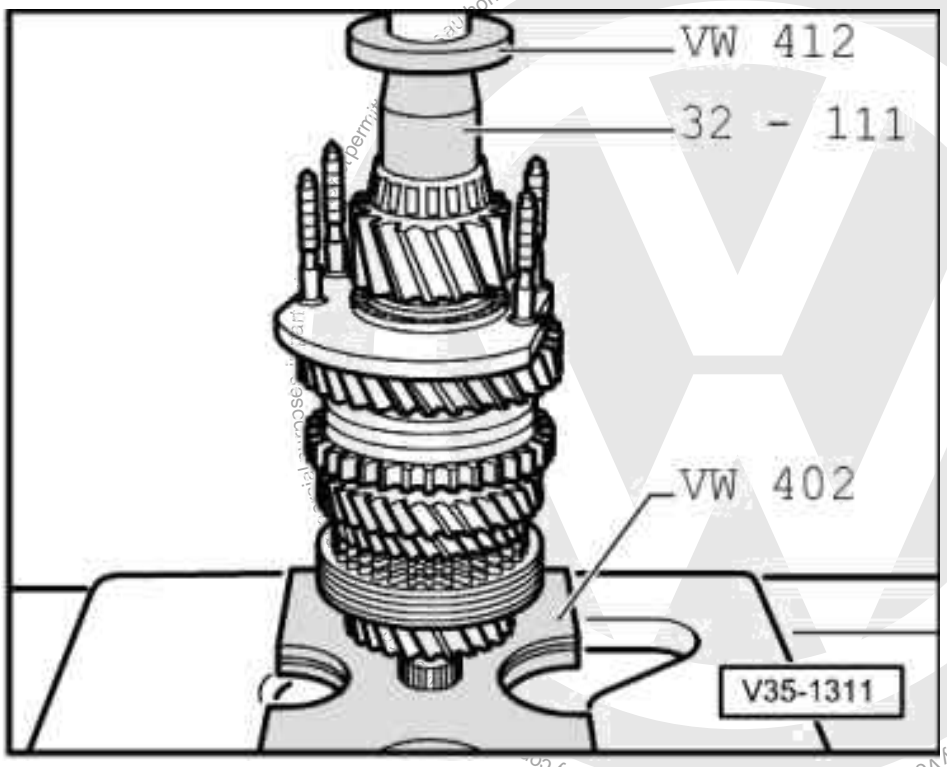

satelettronica

-> Fig.4 Pressing on small taper roller bearing inner race

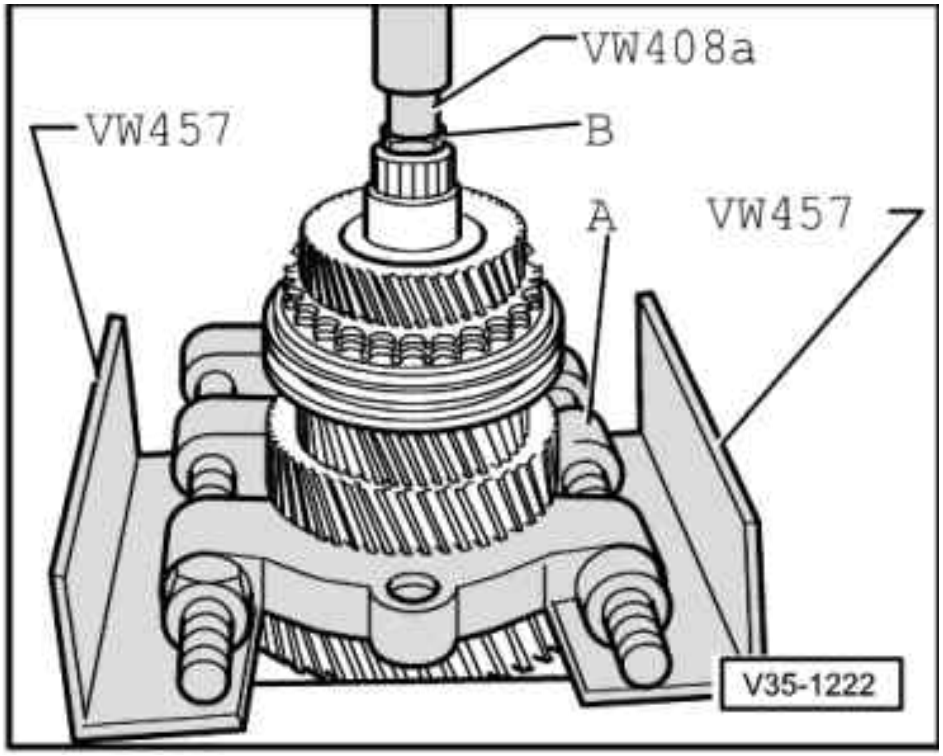

-> Fig.5 Pressing off 3rd and 4th gear synchro-hub/locking collar, 2nd, 3rd and 4th gear wheels with output shaft needle roller bearing sleeve

A - Separating device 22 ... 115 mm, e.g. Kukko 17/2

B - Hexagon bolt 17 mm AF - M10 x 20

Note:

Support separating appliance so that the 1st and 2nd gear locking collar is not pulled off at the same time.

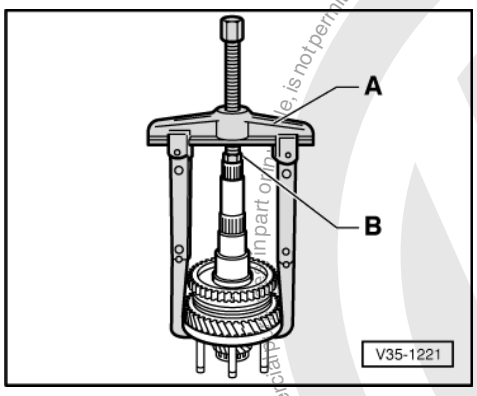

-> Fig.6 Pulling off locking collar with synchro-hub via bearing support

A - Two-arm puller, e.g. Kukko 20/10 with
250 mm reach hooks

Protected by copyright. Copying for private or commercial purposes, in part or in whole, is not permitted unless authorised by Volkswagen AG. Volkswagen AG does not guarantee or accept any liability with respect to the correctness of information in this document. Copyright by Volkswagen AG.
satelettronica

B - Hexagon bolt 17 mm AF - M10 x 20

Note:

Remove circlip before pulling off individual components.

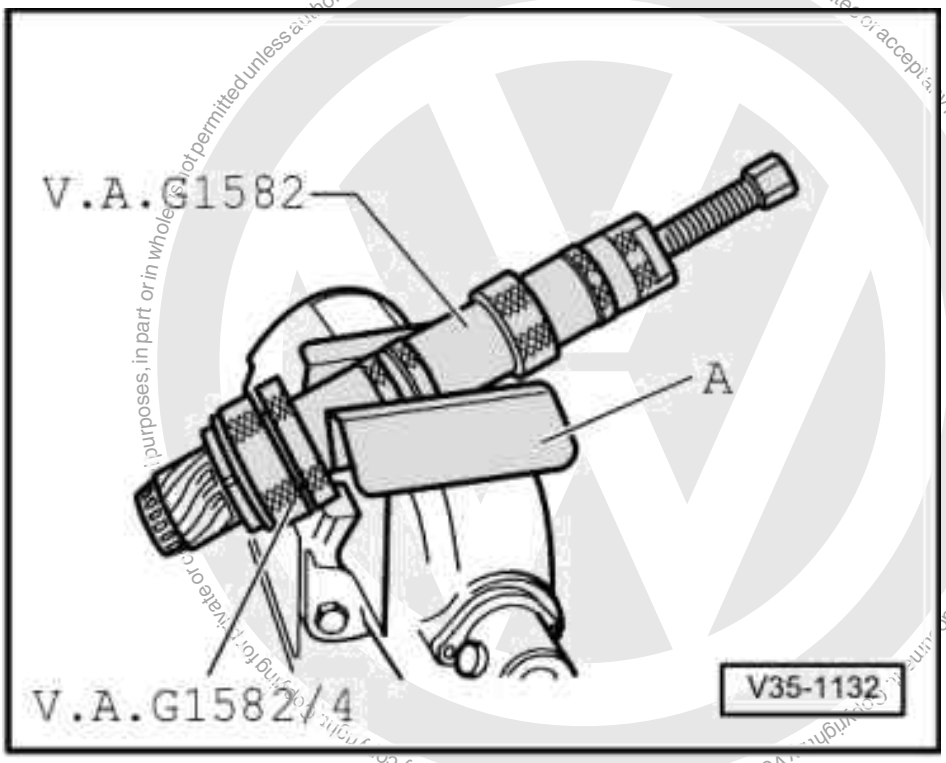

-> Fig.7 Pulling off large taper roller bearing inner race

A - protective jaws

- Before fitting puller insert a M 10 x 20 hexagon bolt in the output shaft drilling.

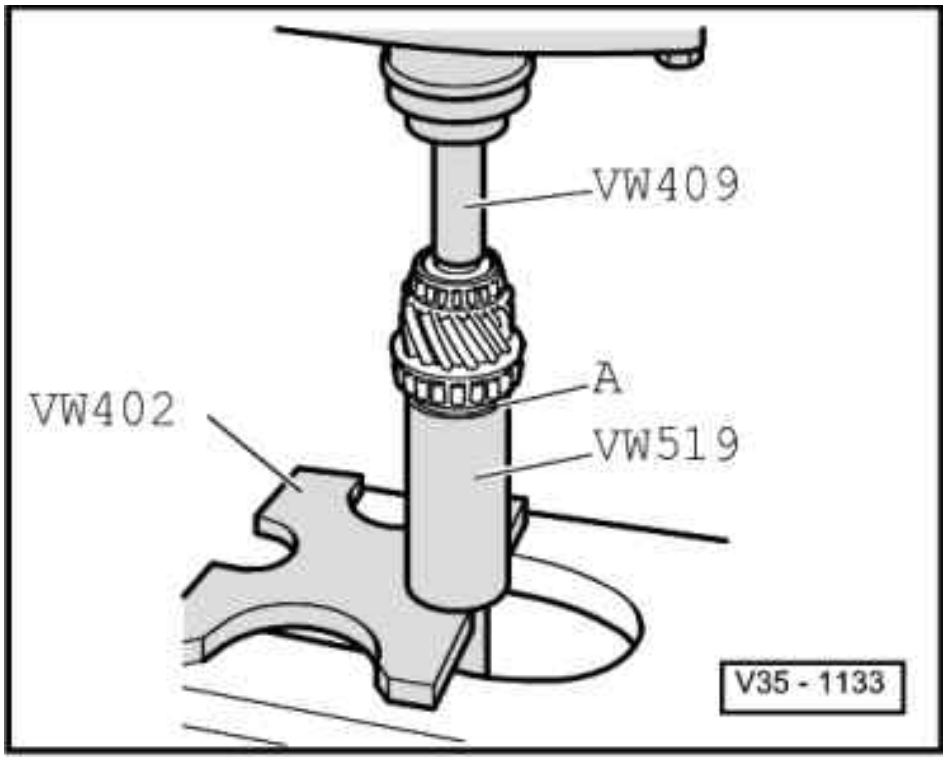

satelettronica

-> Fig.8 Pressing on large taper roller bearing inner race

A - Thrust washer

- Fit thrust washer before pressing on the inner race. The shoulder faces the inner race.

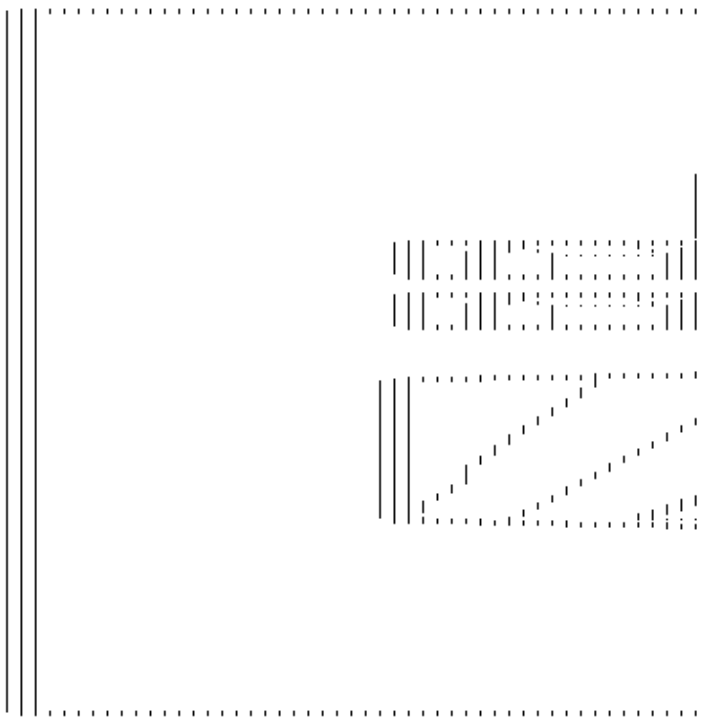

-> Fig.9 Checking synchro-ring for wear

- Press synchro-ring onto the gear cone and measure gap "a" with feeler gauge.

Gap "a"	New dimension	Wear limit
1st gear 3rd gear 4th gear	1.0 ... 1.7 mm 1.0 ... 1.7 mm 1.0 ... 1.7 mm	0.5 mm

satelettronica
Protected by copyright. Copying for private or commercial purposes, in part or in whole, is not permitted unless authorised by Volkswagen AG. Volkswagen AG does not guarantee or accept any liability with respect to the correctness of information in this document. Copyright by Volkswagen AG.

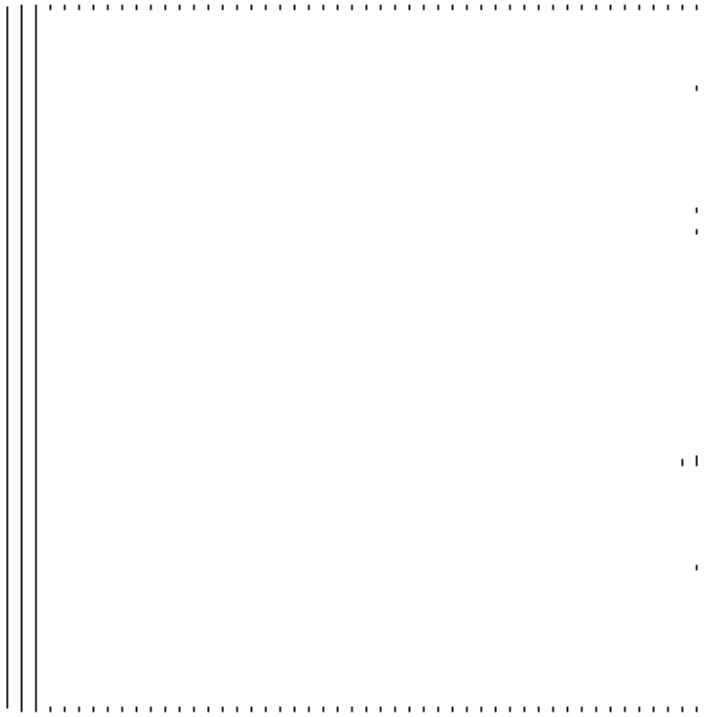

-> Fig.10 Dismantling and assembling 1st and 2nd gear locking collar and synchro-hub

1 - Circlip
2 - Locking collar
3 - Synchro-hub
4 - Locking piece

- Slide locking collar over synchro-hub.

The wide shoulder of the synchro-hub (arrow A) and the outer splines of the locking collar (arrow B) face opposite directions after assembly. Recesses for locking pieces on synchro-hub and locking collar must align.

Protected by copyright. Copying for private or commercial purposes, in part or in whole, is not permitted unless authorised by Volkswagen AG. Volkswagen AG does not guarantee or accept any liability with respect to the correctness of information in this document. Copyright by Volkswagen AG.

satelettronica

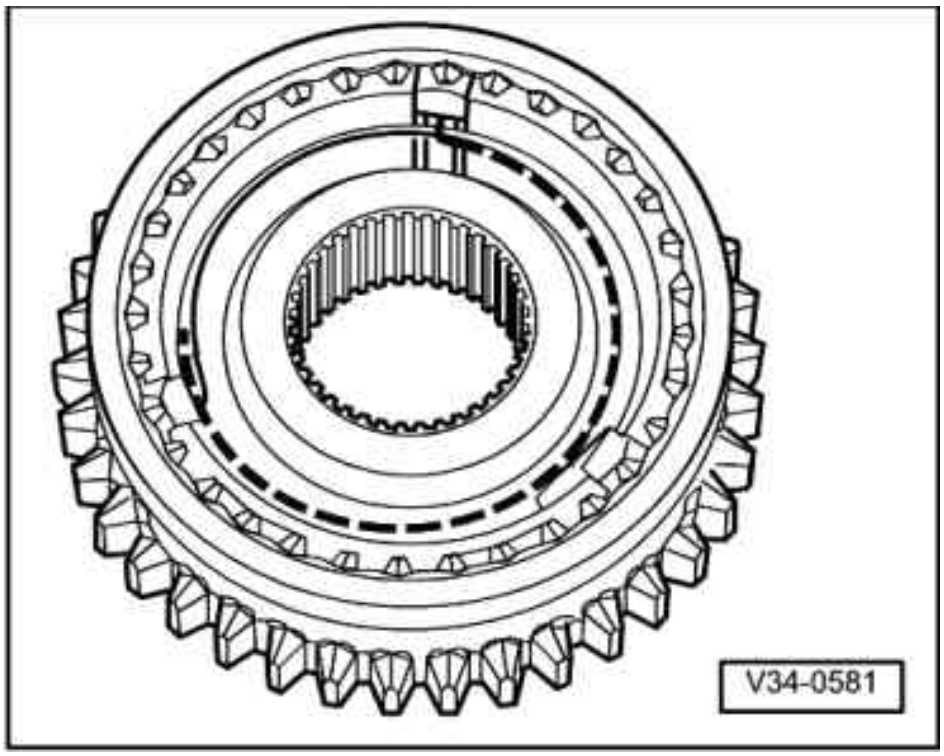

-> Fig.11 Assembling 1st and 2nd gear locking collar/synchro-hub

- Locking collar is pushed over synchro-hub.

- Insert locking pieces and install springs 120° off-set. The angled end of the spring must locate in the hollow locking piece.

Protected by copyright. Copying for private or commercial purposes, in part or in whole, is not permitted unless authorised by Volkswagen AG. Volkswagen AG does not guarantee or accept any liability with respect to the correctness of information in this document. Copyright by Volkswagen AG.

satelettronica

-> Fig.12 Installation position 1st and 2nd gear locking collar/synchro-hub

The locking collar splines (arrow 1) point to splines for 3rd/4th gear synchro-hub -A-.

The wide shoulder of the synchro-hub (arrow 2) then faces to 1st gear -B-.

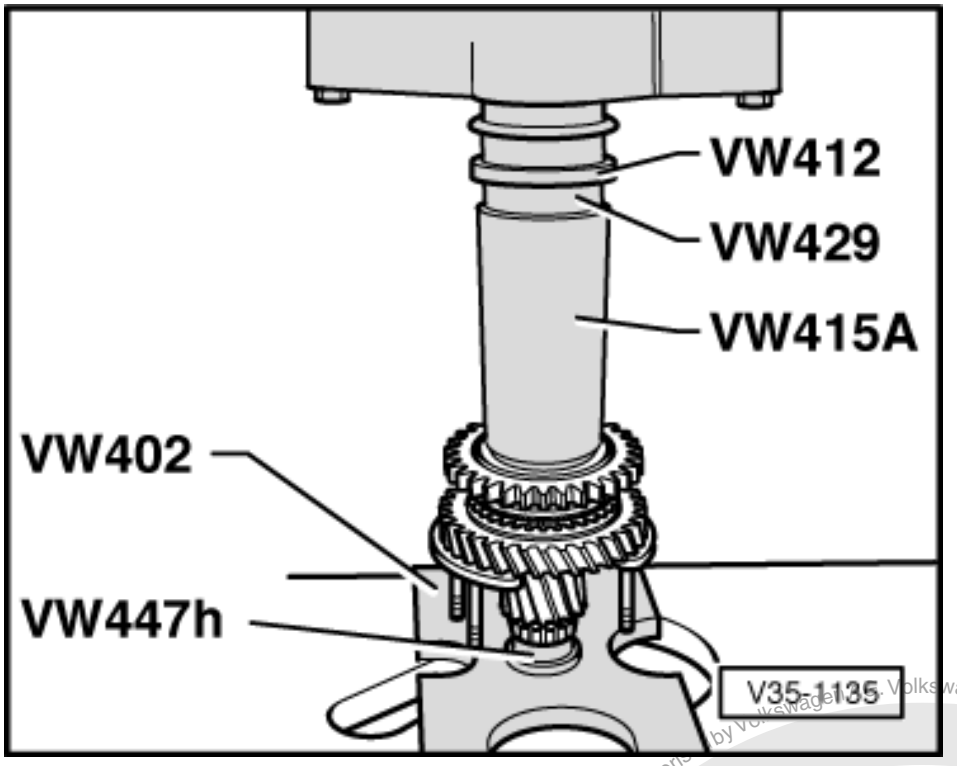

-> Fig.13 Pressing on 1st and 2nd gear locking collar/synchro-hub

Note:

Before pressing on, place 1st gear synchro-ring on 1st gear wheel.

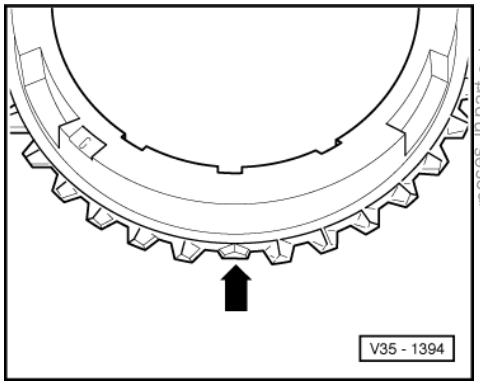

-> Fig.14 Identifying 1st and 2nd gear synchro-rings

- 1st gear synchro-ring: 3 ground-down half teeth (arrow)
- 2nd gear synchro-ring: 3 ground down half teeth (arrow) or 2 ground-down half teeth

Only the version with 2 ground-down half teeth is available as a spare part for the 2nd gear synchro-ring.

satelettronica
Copyright by Volkswagen. Volkswagen AG does not guarantee or accept any liability with respect to the correctness of information in this document. Copyright by Volkswagen. Reproduced by copyright holder. Any copying for private or commercial purposes, in part or in whole, is not permitted unless authorised by Volkswagen AG.

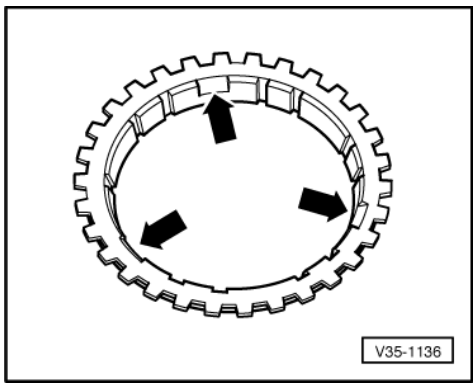

-> Fig.15 Distinguishing 1st and 2nd gear synchro-rings

- 1st gear synchro-ring - no recesses
- 2nd gear synchro-ring - three recesses (arrows)

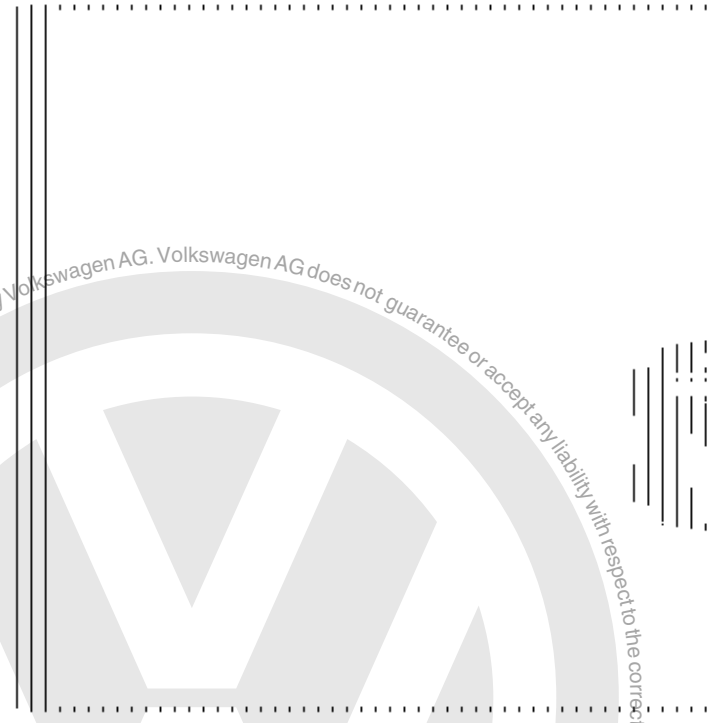

-> Fig.16 Checking 2nd gear synchro-ring for wear

Press synchro-ring, outer-ring and inner-ring onto selector gear cone and measure gap "a" with feeler gauge.

Gap "a"	New dimension	Wear limit
2nd gear	1.2 ... 1.8 mm	0.5 mm

Protected by copyright. Copying for private or commercial purposes, in part or in whole, is not permitted unless authorised by Volkswagen AG. Volkswagen AG does not guarantee or accept any liability with respect to the correctness of information in this document. Copyright by Volkswagen AG.

satelettronica

-> Fig.17 Installation position outer-ring

The lugs (arrows) face to 1st gear -A-

Protected by copyright. Copying for private or commercial purposes, in part or in whole, is not permitted unless authorised by Volkswagen AG. Volkswagen AG does not guarantee or accept any liability with respect to the correctness of information in this document. Copyright by Volkswagen AG.

satelettronica

Protected by copyright. Copying for private or commercial purposes, in part or in whole, is not permitted unless authorised by Volkswagen AG. Volkswagen AG does not guarantee or accept any liability with respect to the correctness of information in this document. Copyright by Volkswagen AG.

-> Fig.18 Checking inner ring for wear

- Press inner ring onto 2nd selector gear cone and measure gap "a" with a feeler gauge.

Gap "a"	New dimension	Wear limit
2nd gear	0.75 ... 1.25 mm	0.3 mm

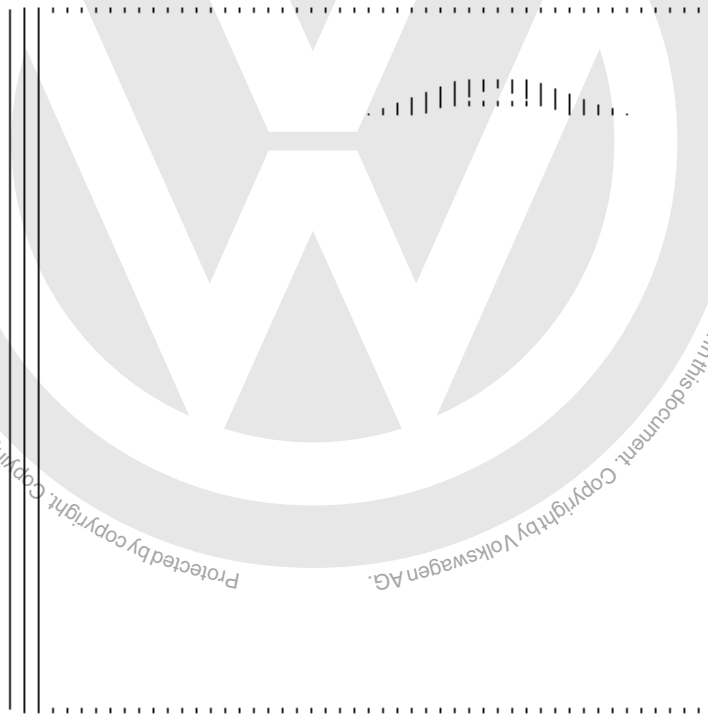

-> Fig.19 Installation position synchro-ring (inner-ring) -A-

The lugs (arrow 1) locate in the recesses (arrow 2) in the synchro-ring -B-.

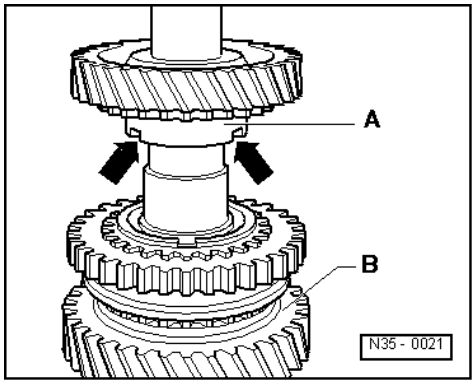

-> Fig.20 Installation position 2nd gear wheel

The higher shoulder -A- faces to 1st gear -B-. The recesses in the shoulder (arrows) locate with the lugs of the outer-ring (arrow => Fig. 17)

satelettronica

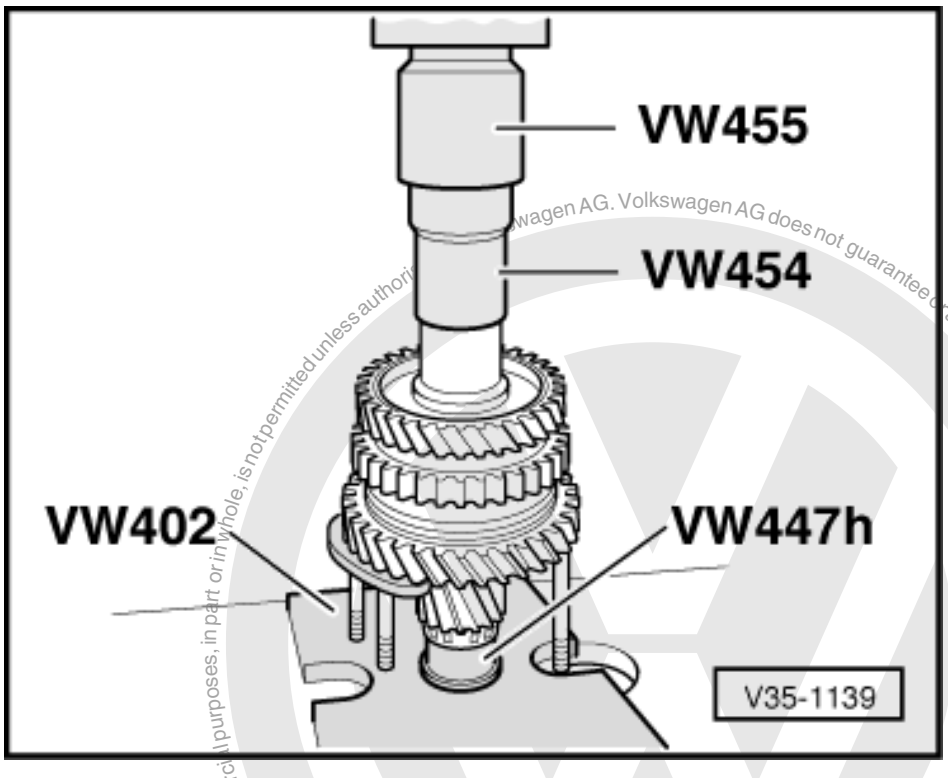

-> Fig.21 Pressing on needle roller bearing sleeve for 3rd gear

Protected by copyright. Copying for private or commercial purposes, in part or in whole, is not permitted unless authorised by Volkswagen AG. Volkswagen AG does not guarantee or accept any liability with respect to the correctness of information in this document. Copyright by Volkswagen AG.

satelettronica

-> Fig.22 Dismantling and assembling 3rd and 4th gear locking collar and synchro-hub

1 - Spring
2 - Locking piece
3 - Locking collar

4 - Synchro-hub

- Slide locking collar over synchro-hub.

The recesses for locking pieces in synchro-hub and locking collar must align.

-> Fig.23 Assembling 3rd and 4th gear locking collar/synchro-hub

The locking collar has been pushed over the synchro-hub.

- Insert locking pieces and install springs 120° off-set. The angled end of the spring must locate in the hollow locking piece.

Protected by copyright. Copying for private or commercial purposes, in part or in whole, is not permitted unless authorised by Volkswagen AG. Volkswagen AG does not guarantee or accept any liability with respect to the correctness of information in this document. Copyright by Volkswagen AG.

satelettronica

-> Fig.24 Installation position 3rd and 4th gear locking collar/synchro-hub

Chamfer (arrow) faces to 4th gear.

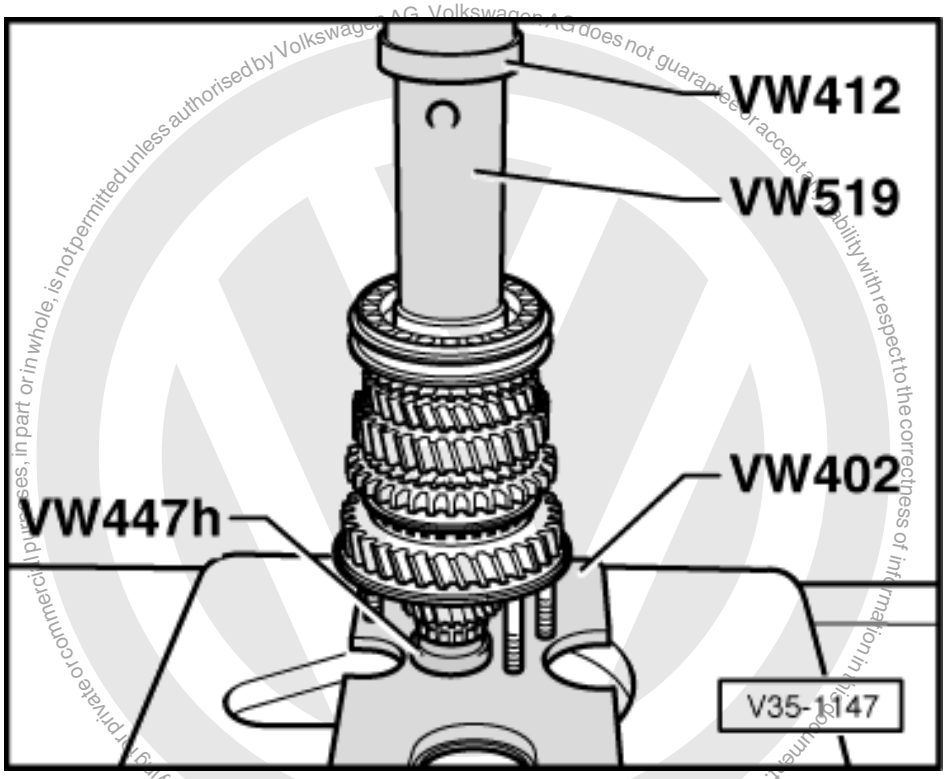

Protected by copyright. Copyright by Volkswagen AG.

satelettronica

-> Fig.25 Pressing on 3rd and 4th gear synchro-hub with locking collar

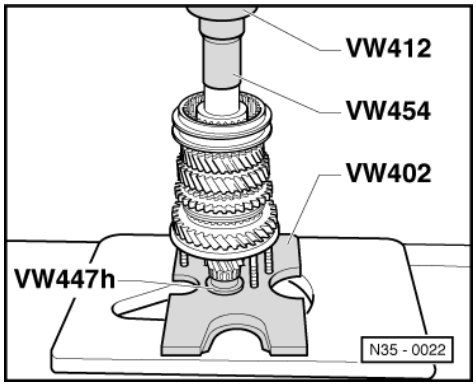

-> Fig.26 Pressing on sleeve for 4th gear needle roller bearing

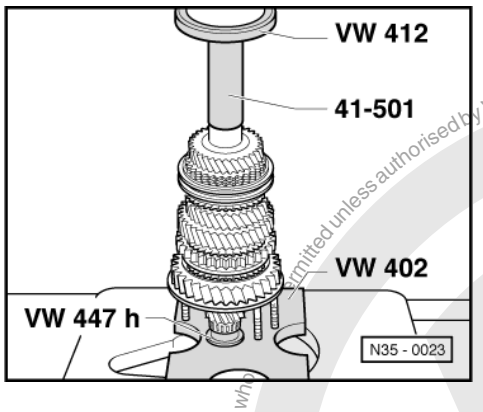

-> Fig.27 Pressing on sleeve for output shaft needle roller bearing

3.2 - From gearbox build date 04 09 0 the synchronisation for 1st gear has been modified

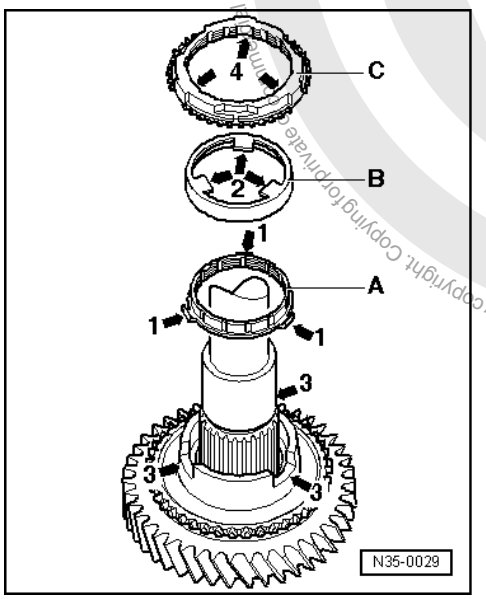

Protected by copyright. Copying for private and commercial purposes, in part or in whole, is not permitted unless authorised by Volkswagen AG. Volkswagen AG does not guarantee or accept any liability with respect to the correctness of information in this document. Copyright by Volkswagen AG.
satelettronica

-> The following components have been added or modified:

- A- Inner ring
- B- Outer ring
- C- Synchro-ring

with additional recesses -4- for the lugs -1- of inner ring -A-.

- 1st gear wheel

with additional recesses -3- for the lugs -2- of outer ring -B-.

Note:

For the 2nd gear the same inner ring, outer ring and synchro ring are installed.

- If the components are not renewed, ensure they are reallocated to the original gear.

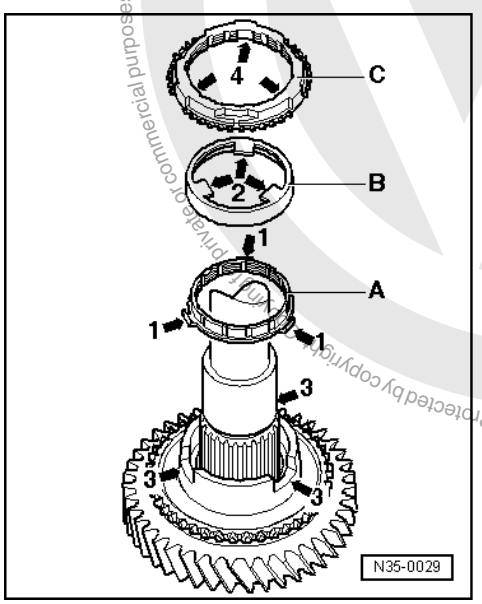

-> Installation position of inner ring, outer ring and synchro-ring 1st gear:

- Place inner ring -A- on 1st gear wheel.

Angled lugs (arrow 1) point towards outer ring -B-.

- Fit outer ring -B-.

Lugs (arrow 2) engage in gear wheel recesses (arrow 3).

- Fit synchro-ring -C-.

The recesses (arrow 4) engage in lugs (arrow 1) of inner ring -A-.

Protected by copyright. Copyright by Volkswagen AG. Volkswagen AG does not guarantee or accept any liability with respect to the correctness of information in this document. Copyright by Volkswagen AG. Protected by copyright. Copy for private or commercial purposes, in part or in whole, is not permitted unless authorised by Volkswagen AG.
satelettronica

Protected by copyright. Copying for private or commercial purposes, in part or in whole, is not permitted unless authorised by Volkswagen AG. Volkswagen AG does not guarantee or accept any liability with respect to the correctness of information in this document. Copyright by Volkswagen AG.

-> Check inner ring 1st gear for wear

- Press inner ring onto gear wheel cone and measure gap "a" with a feeler gauge.

Gap "a"	New dimension	Wear limit
1st gear	0.75 ... 1.25 mm	0.3 mm

satelettronica

-> Check synchro-ring 1st gear and outer ring for wear

- Press synchro-ring, outer-ring and inner-ring onto selector gear cone and measure gap "a" with feeler gauge.

Gap "a"	New dimension	Wear limit
1st gear	1.2 ... 1.8 mm	0.5 mm

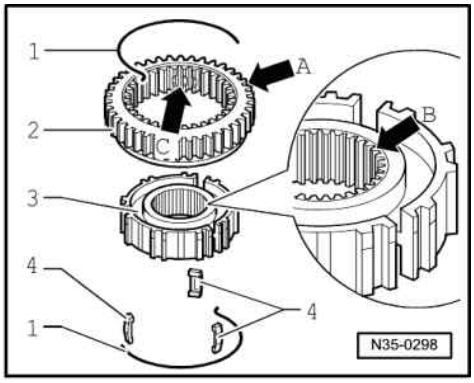

-> Assembling locking collar and locking pieces with 1st and 2nd gear synchro-hub

1 - Circlip
2 - Locking collar
3 - Synchro-hub
4 - Locking piece

With introduction of the modified 1st gear synchronisation the shoulder has the same width on both sides of synchro-hub.

The shoulder has a chamfer on one side (arrow B).

After assembly the shoulder of the synchro-hub and the outer splines of the locking collar (arrow A) face same direction.

Recesses for locking pieces on synchro-hub and locking collar (arrow C) must align.

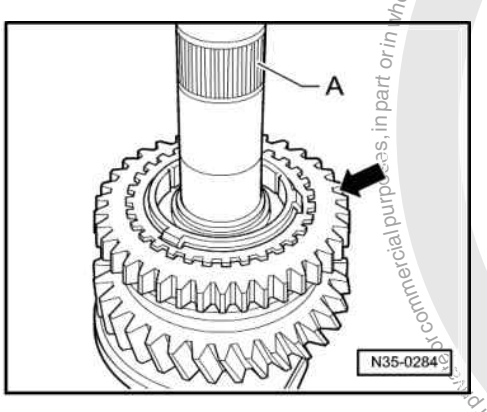

-> Installation position of locking collar/synchro-hub 1st and 2nd gear

The locking collar splines (arrow) point to splines for 3rd/4th gear synchro-hub -A-.

- Remove the 1st gear synchro-hub as described and install again.

satelettronica
Copyright by Volkswagen AG. Volkswagen AG does not guarantee or accept any liability with respect to the correctness of information in this document. Copyright by Volkswagen AG.
Protected by copyright. Copying for private or commercial purposes, in part or in whole, is not permitted unless authorised by Volkswagen AG.

4 - Adjusting output shaft

4.1 - Adjusting output shaft

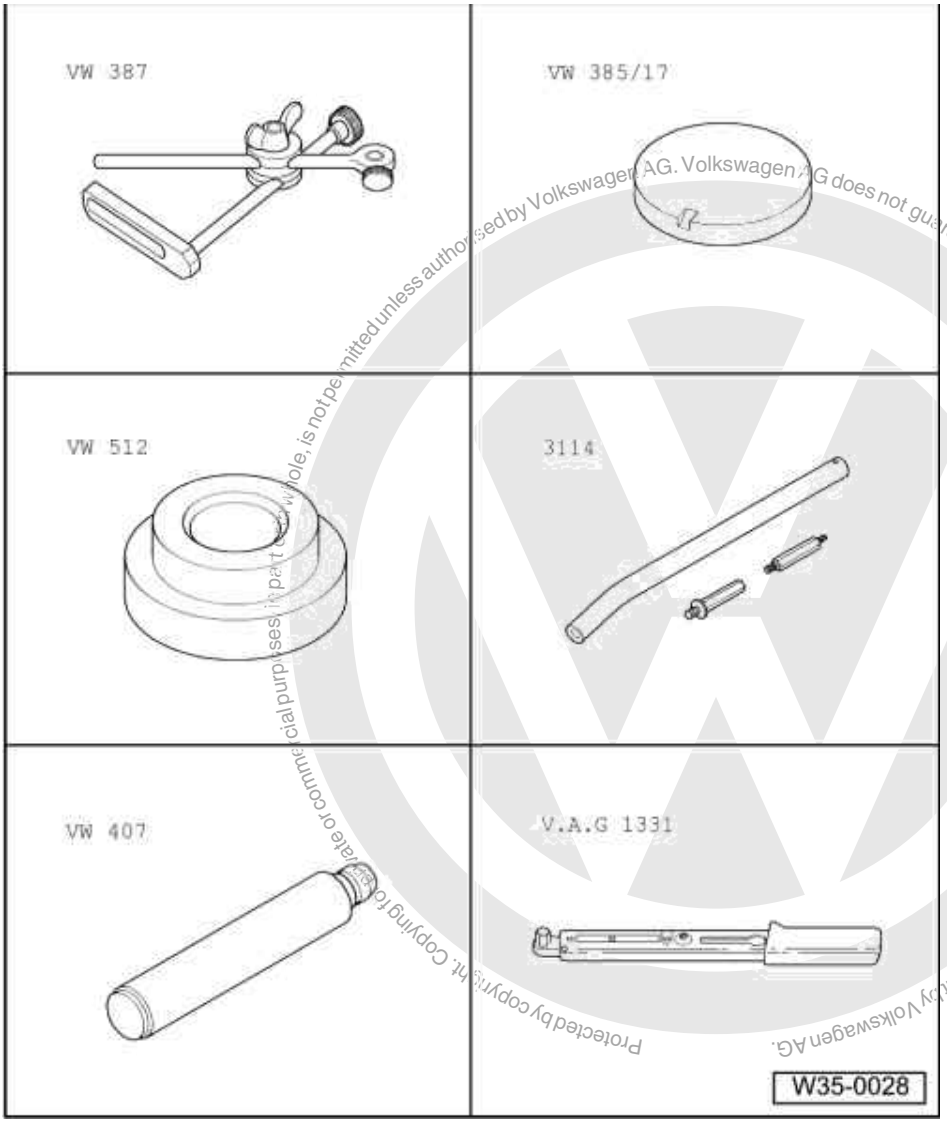

(Determining shim for output shaft)

Special tools and workshop equipment required

- VW 387 Universal dial gauge bracket
- VW 385/17 End measuring plate
- VW 512 Press disk
- 3114/2 Straightening tool
- VW 407 Press tool
- V.A.G 1331 Torque wrench
- Dial gauge

Protected by copyright. Copying for private or commercial purposes, in part or in whole, is not permitted unless authorised by Volkswagen AG. Volkswagen AG does not guarantee or accept any liability with respect to the correctness of information in this document. Copyright by Volkswagen AG.
satelettronica

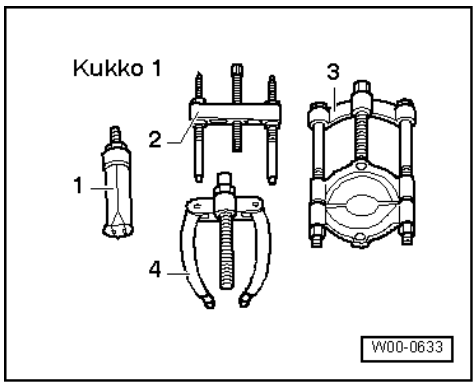

Special tools and workshop equipment required

- 1 - Internal puller Kukko 21/6
- 4 - Kukko 22/2 Counter support

It is necessary to readjust the output shaft when the following components are renewed:

- Final drive
- Clutch housing

or

- Taper roller bearing

Adjustment overview => Page 220

- Press small taper roller bearing outer race together with a 0.65 mm thick shim fully into clutch housing=>Page 178
- Insert output shaft and tighten nuts for bearing support to 25 Nm, then turn 90° further.

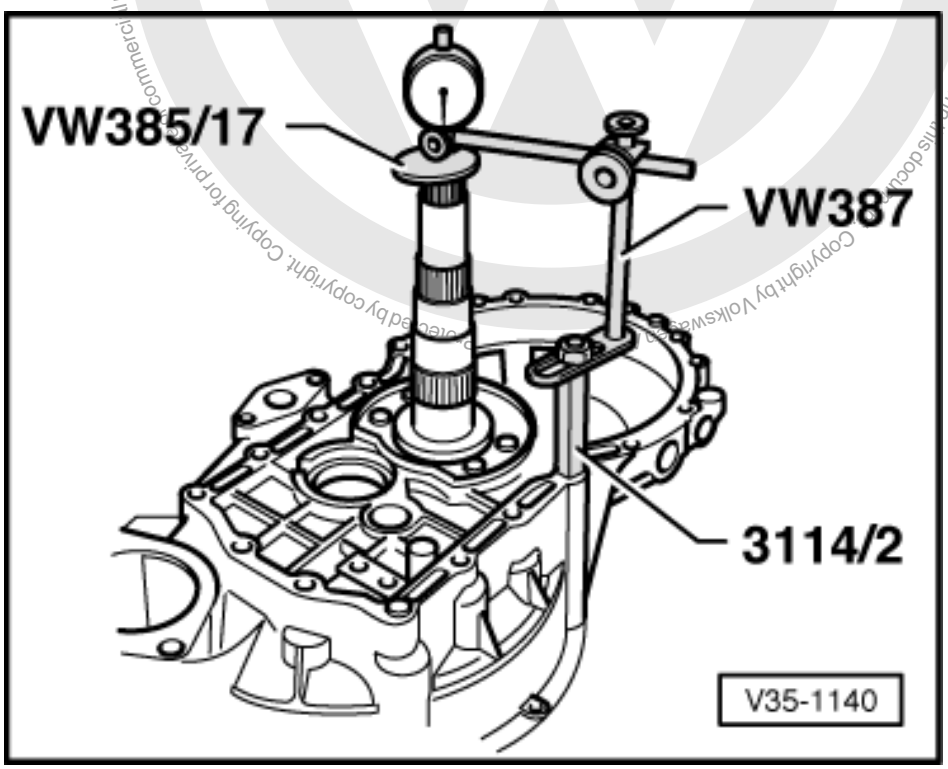

- -> Mount dial gauge (3 mm measuring range) and set to "0" with 1 mm preload.

Copyright by Volkswagen AG does not guarantee or accept any liability with respect to the correctness of information in this document. Copyright by Volkswagen AG. Copying for private or commercial purposes, in part or in whole, is not permitted unless authorised by Volkswagen AG.
satelettronica

- Move output shaft up and down and note dial gauge reading (example: 0.30 mm).

Determining thickness of shim

The specified bearing preload is obtained by adding
a constant preload figure of (0.20 mm)
to the reading obtained (0.30 mm)
and the thickness of the shim installed (0.65 mm).

Example:

Shim installed	0.65 mm
+ Reading	0.30 mm
+ Preload (constant)	0.20 mm
Thickness of shim	1.15 mm

- Remove output shaft and pull out small taper roller bearing outer race => Page 177

The following adjustment shims are available:

Size (mm)	Part No.
0.65	020 311 391 P
0.70	020 311 391 Q
0.75	020 311 391
0.80	020 311 391 A
0.85	020 311 391 B
0.90	020 311 391 C
0.95	020 311 391 D
1.00	020 311 391 E
1.05	020 311 391 F
1.10	020 311 391 G
1.15	020 311 391 H
1.20	020 311 391 J
1.25	020 311 391 K
1.30	020 311 391 L
1.35	020 311 391 M
1.40	020 311 391 N

Varying tolerances make it possible to obtain the exact shim thickness required.

- Press in small taper roller bearing outer race together with the correct shim (in example 1.15 mm) (=>Page 178) and install output shaft. Tighten bearing support nuts in clutch housing to 25 Nm and then turn 90° further.

Protected by copyright. Copying for private or commercial purposes, in part or in whole, is not permitted unless authorised by Volkswagen AG. Volkswagen AG does not guarantee or accept any liability with respect to the correctness of information in this document. Copyright by Volkswagen AG.
satelettronica

5 - Dismantling and assembling reverse shaft

5.1 - Dismantling and assembling reverse shaft

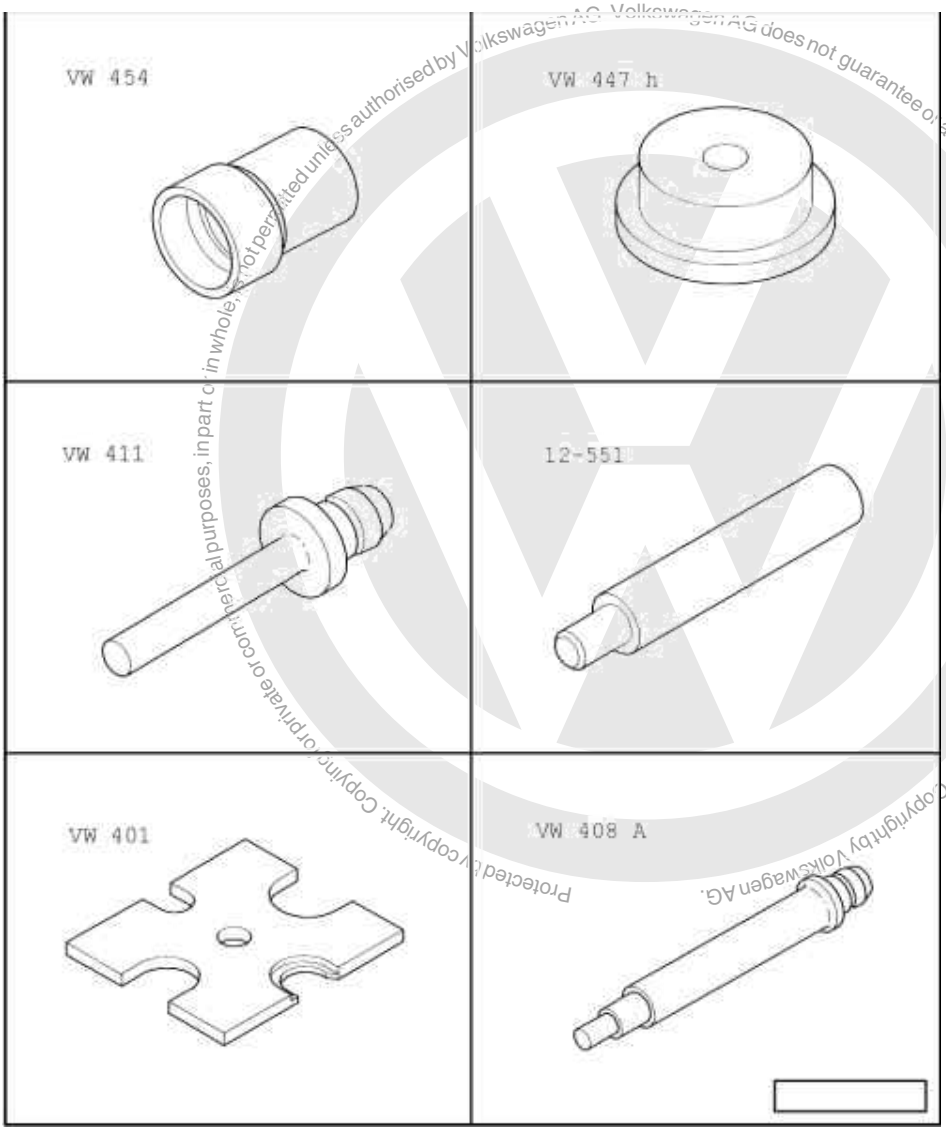

Protected by copyright. Copying for private or commercial purposes, in part or in whole, is not permitted unless authorised by Volkswagen AG. Volkswagen AG does not guarantee or accept any liability with respect to the correctness of information in this document. Copyright by Volkswagen AG.

satelettronica

Special tools and workshop equipment required

- VW 454 Press piece
- VW 447 H Press plate
- VW 411 Press tool
- 12-551 Centring mandrel
- VW 401 Thrust plate
- VW 408 A Press tool

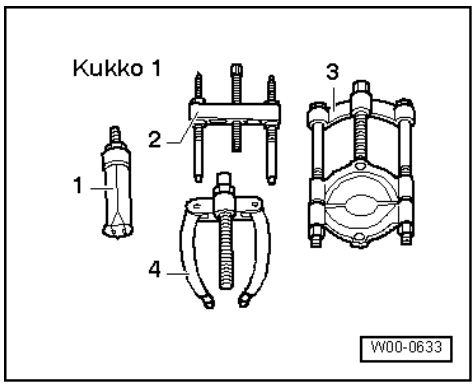

Special tools and workshop equipment required

- 1 - Internal puller Kukko 21/2
- 4 - Counter support Kukko 22/1

Protected by copyright. Copying for private or commercial purposes, in part or in whole, is not permitted unless authorised by Volkswagen AG. Volkswagen AG does not guarantee or accept any liability with respect to the correctness of information in this document. Copyright by Volkswagen AG.

satelettronica

Note:

After dismantling, always renew needle roller bearing in clutch housing and reverse shaft support.

1 Clutch housing
2 Needle roller bearing
- Pulling out => Fig. 1
- Pressing in => Fig. 2

3 Reverse gear wheel
4 Circlip
- Always renew after removing

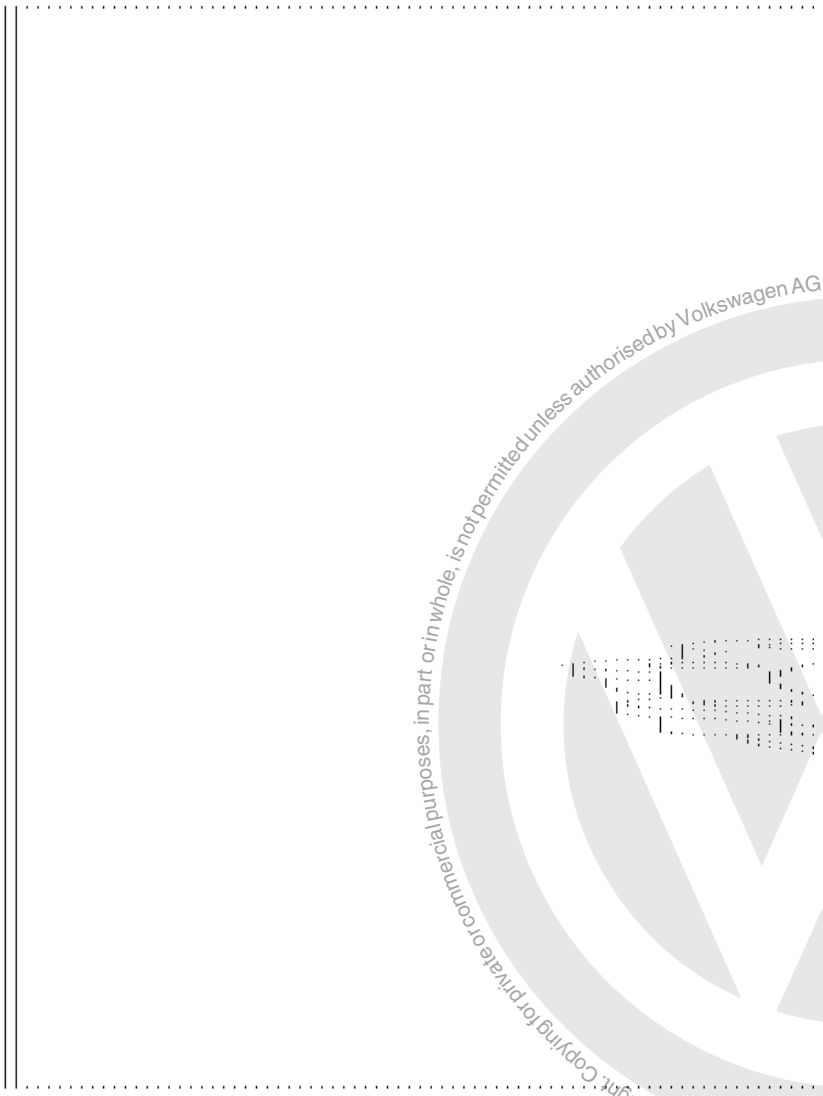

Protected by copyright. Copyright by Volkswagen AG.
Copyright by Volkswagen AG. Volkswagen AG does not guarantee or accept any liability with respect to the correctness of information in this document.
Protected by copyright. Copying for private or commercial purposes, in part or in whole, is not permitted unless authorised by Volkswagen AG.
salettronica

5 Reverse sliding gear wheel
- Before replacing remove circlip
- Shoulder faces to reverse gear wheel

6 Reverse shaft
- Removing => Page 100

7 Needle roller bearing
- Pressing out => Fig. 3
- Pressing in => Fig.4

8 Reverse shaft support
- Removing and installing

=> Page 100

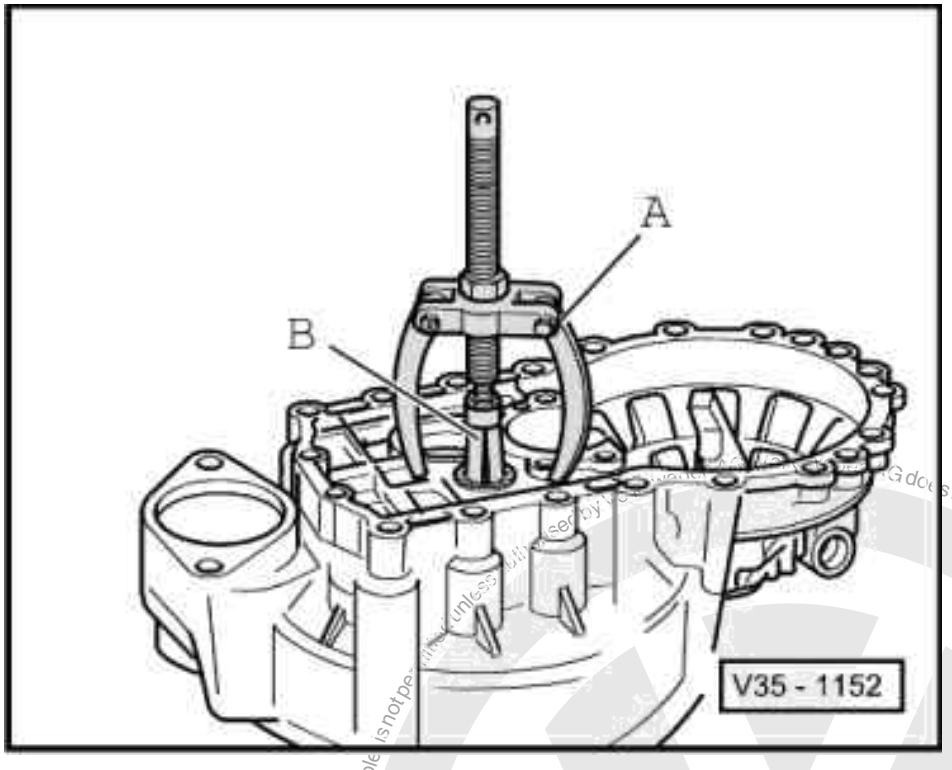

-> Fig.1 Pulling needle roller bearing out of clutch housing

A - Counter support, e.g. Kukko 22/1

B - Internal extractor 14.5 ... 18.5 mm, e.g. Kukko 21/2

Note:

The needle bearing is destroyed during removal and must be renewed.

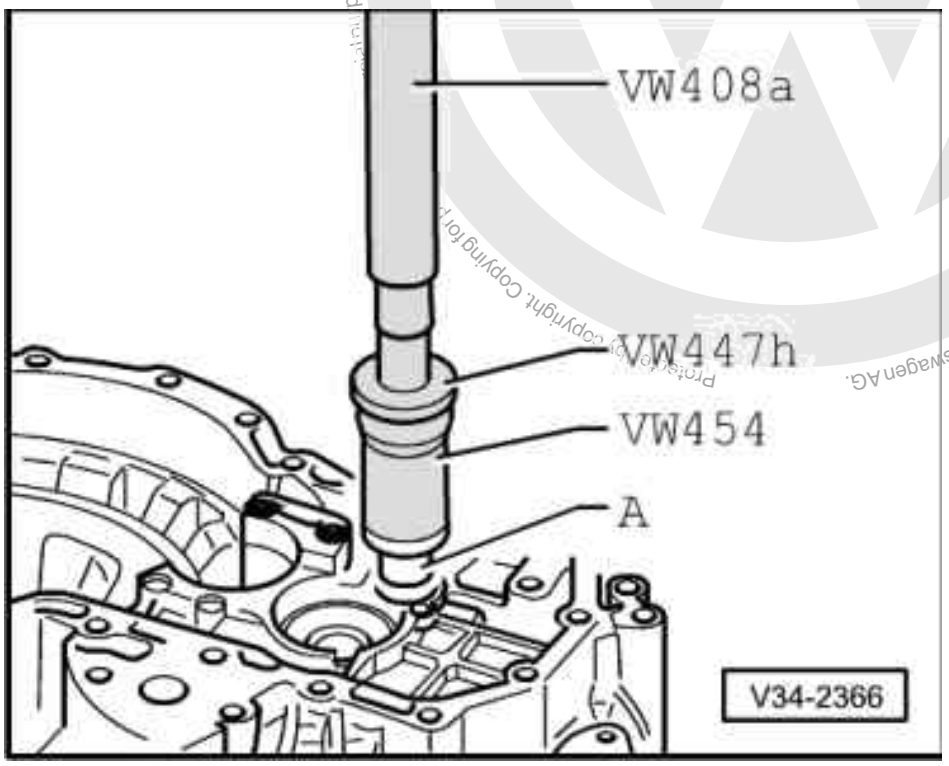

satelettronica

-> Fig.2 Pressing needle roller bearing -A- into clutch housing

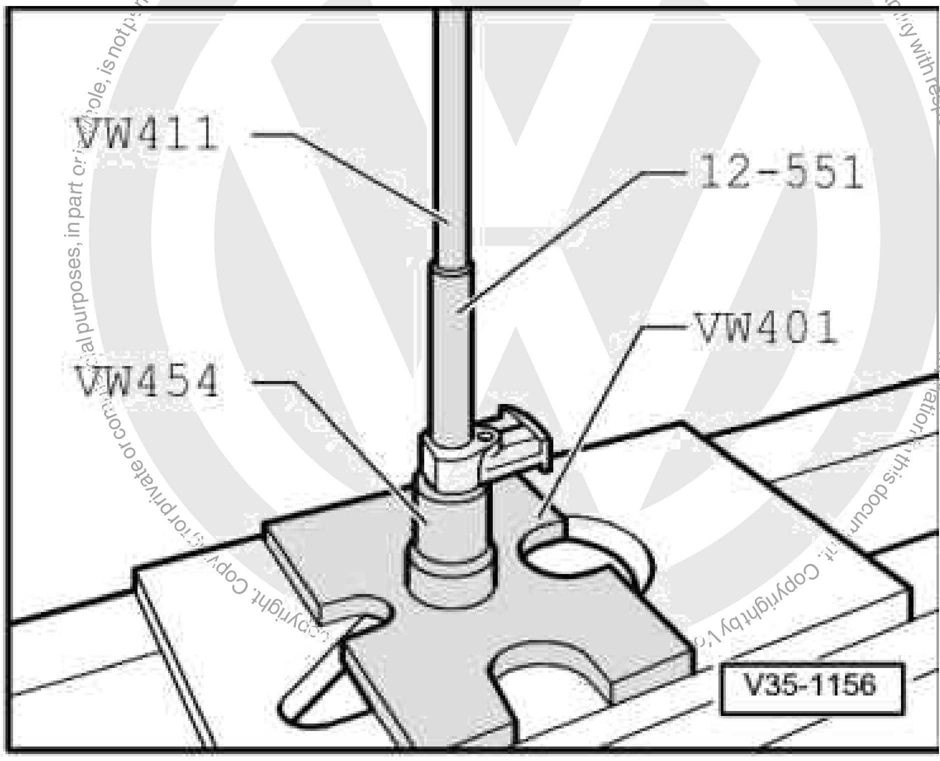

-> Fig.3 Pressing needle roller bearing out of the reverse shaft support

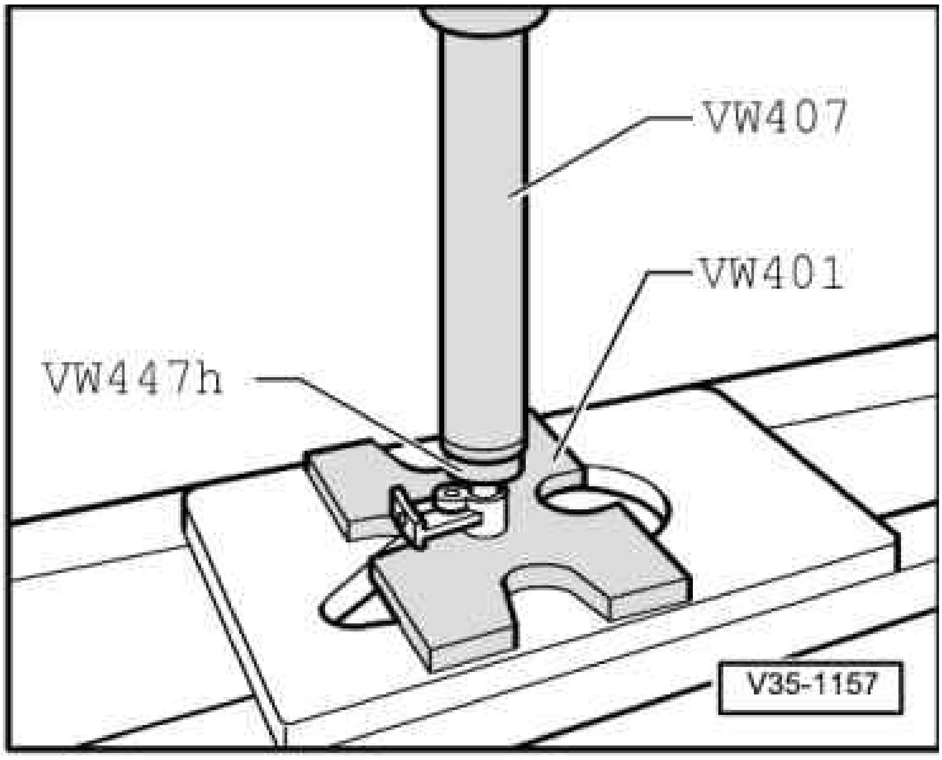

-> Fig.4 Pressing needle roller bearing into reverse shaft support

Protected by copyright. Copying for private or commercial purposes, in part or in whole, is not permitted unless authorised by Volkswagen AG. Volkswagen AG does not guarantee or accept any liability with respect to the correctness of information in this document. Copyright by Volkswagen AG.

sateletronica

39 - Final drive, Differential rear

1 - Renewing flanged shaft oil seals (gearbox installed)

1.1 - Renewing flanged shaft oil seals (gearbox installed)

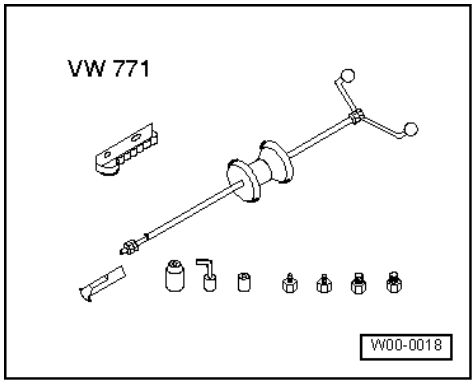

- Observe general repair instructions => Page 7 .

Special tools and workshop equipment required

- VW 771 Multi-purpose tool
- VW 771/37 Puller hooks

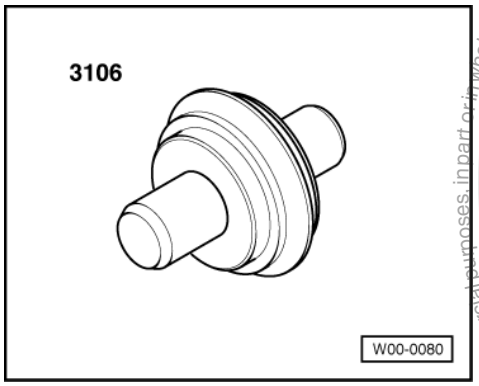

- 3106 Drift

Special tools and workshop equipment required

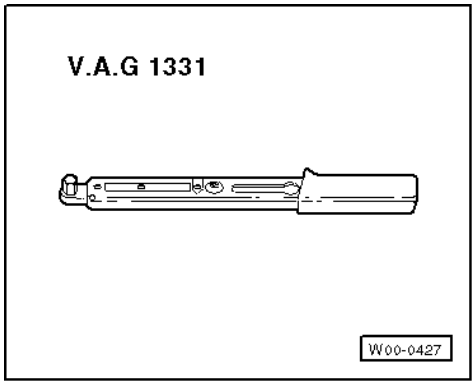

Protected by copyright. Copying for private or commercial purposes, in part or in whole, is not permitted unless authorised by Volkswagen AG. Volkswagen AG does not guarantee or accept any liability with respect to the correctness of information in this document. Copyright by Volkswagen AG.
satelettronica

Protected by copyright. Copyright by Volkswagen AG. Volkswagen AG does not guarantee or accept any liability with respect to the correctness of information in this document. Copyright by Volkswagen AG.

- V.A.G 1331 Torque wrench

Removing

- Before replacing left-hand oil seal:

- Remove drive shaft

=> Running gear, axles, steering; Repair group 40; Servicing drive shafts, Removing and installing drive shafts Servicing drive shafts, Removing and installing drive shafts

- Before replacing right-hand oil seal:

- Turn steering to right onto full lock stop.
- Remove drive shaft protective cap from engine, if fitted.
- Disconnect drive shaft from flanged shaft.
- Tie-up drive shaft as high as possible. Do not damage paint on drive shaft.

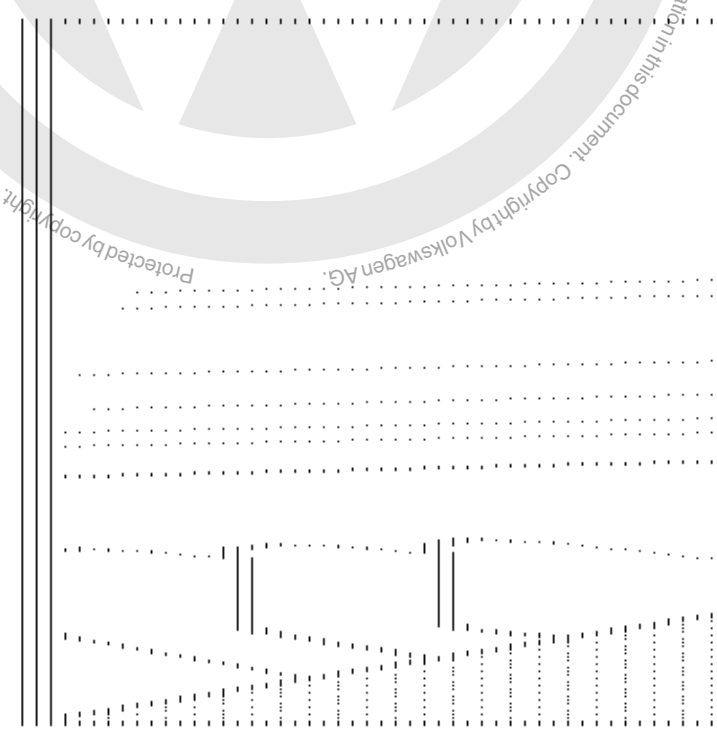

- Place drip tray underneath.
- -> Remove flange shaft cone head bolt.
- Remove flanged shaft with spring.

satelettronica

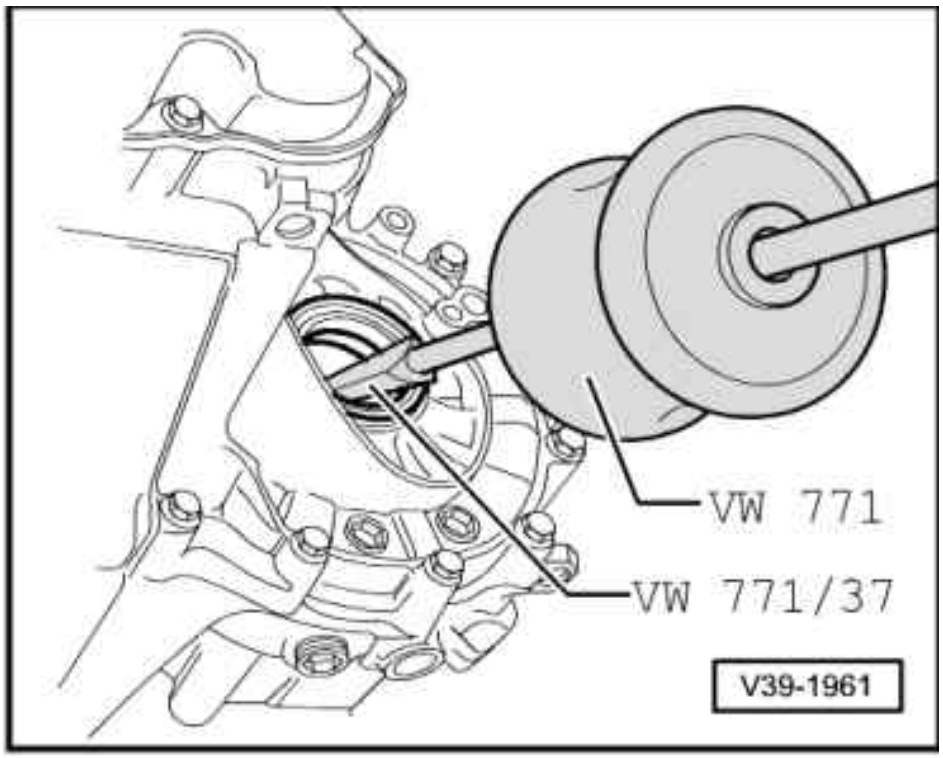

- -> Pull out seal.

Notes:

- Do not damage sleeve, otherwise leaks will occur.
- Replace sleeve if damaged
  => Page 127 .

Installing

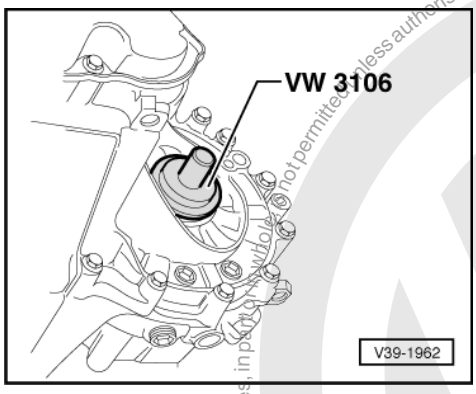

- -> Drive seal into sleeve onto stop, when doing this do not cant seal.
- Fill space between sealing lip and dust lip with grease G 052 128 A1.
- Insert flanged shaft.
- Install cone head bolt into flange shaft threaded piece.
- Install left-hand drive shaft or attach right-hand drive shaft to flange shaft.

=> Running gear, axles, steering; Repair group 40; Servicing drive shafts, Removing and installing drive shafts Servicing drive shafts, Removing and installing drive shafts

- Install drive shaft protective cover if necessary.
- Top up gearbox oil => Page 88 .

Protected by copyright. Copyright by Volkswagen AG.
Copyright by Volkswagen AG. Volkswagen AG does not guarantee or accept any liability with respect to the correctness of information in this document.
satelettronica

Tightening torques

Flange shaft to gearbox (cone head bolt)	25 Nm
Drive shaft protective cover to engine	35 Nm

2 - Dismantling and assembling differential

2.1 - Dismantling and assembling differential

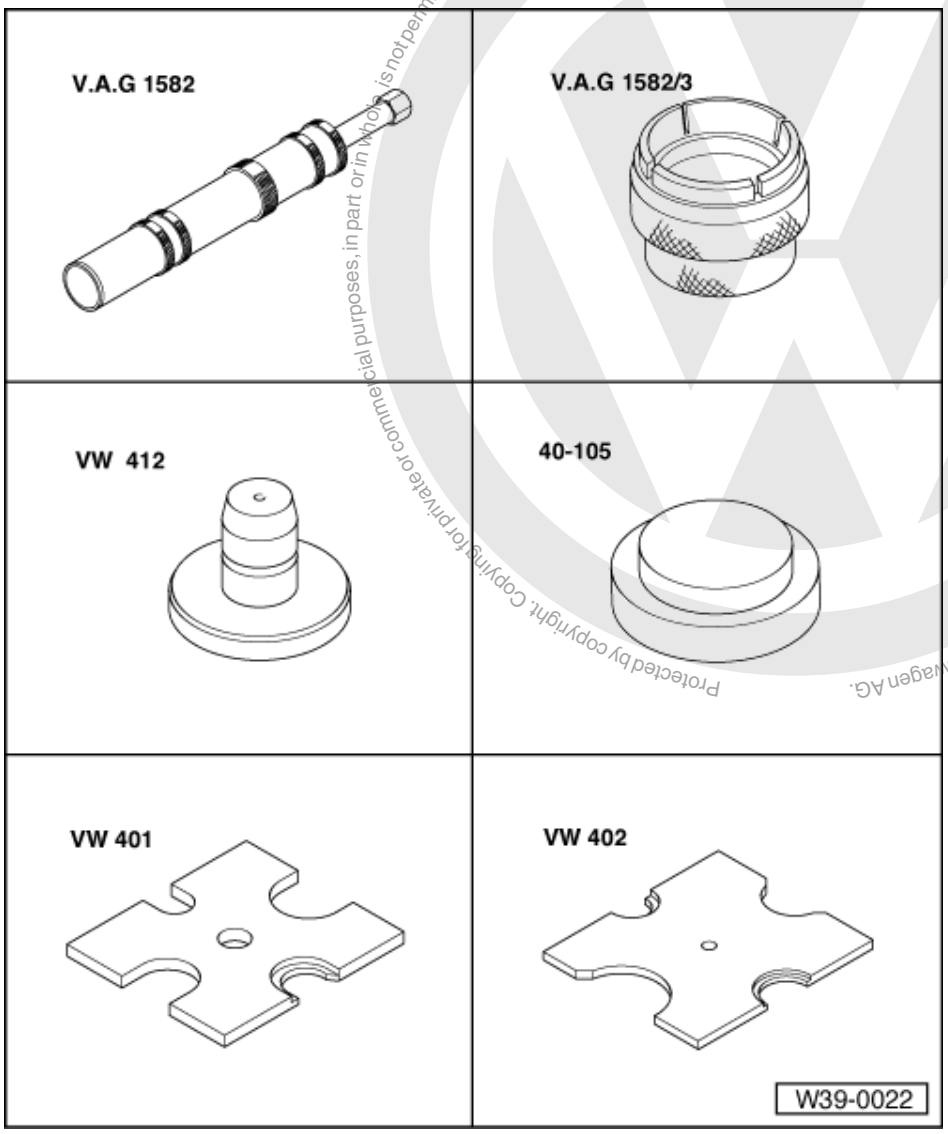

Special tools and workshop equipment required

- V.A.G 1582 Puller
- V.A.G 1582/3 Grip
- VW 412 Press tool
- 40-105 Thrust plate
- VW 401 Thrust plate
- VW 402 Thrust plate

Protected by copyright. Copying for private or commercial purposes, in part or in whole, is not permitted unless authorised by Volkswagen AG. Volkswagen AG does not guarantee or accept any liability with respect to the correctness of information in this document. Copyright by Volkswagen AG.
satelettronica

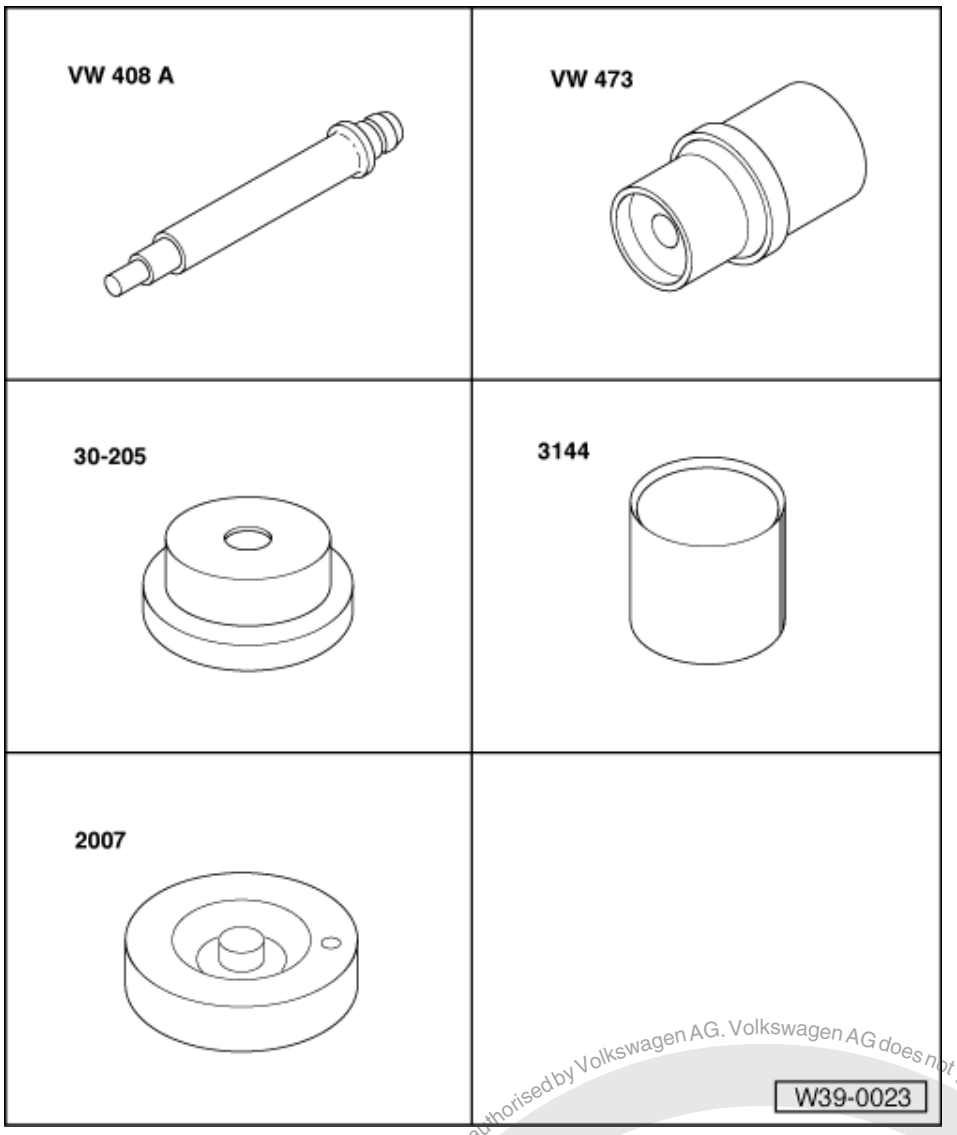

Special tools and workshop equipment required

- VW 408 A Press tool
- VW 473 Thrust piece
- 30-205 Thrust plate
- 3144 Sleeve
- 2007 Thrust pad

satelettronica
Protected by copyright. Copying for private or commercial purposes, in part or in whole, is not permitted unless authorised by Volkswagen AG. Volkswagen AG does not guarantee or accept any liability with respect to the correctness of information in this document. Copyright by Volkswagen AG.

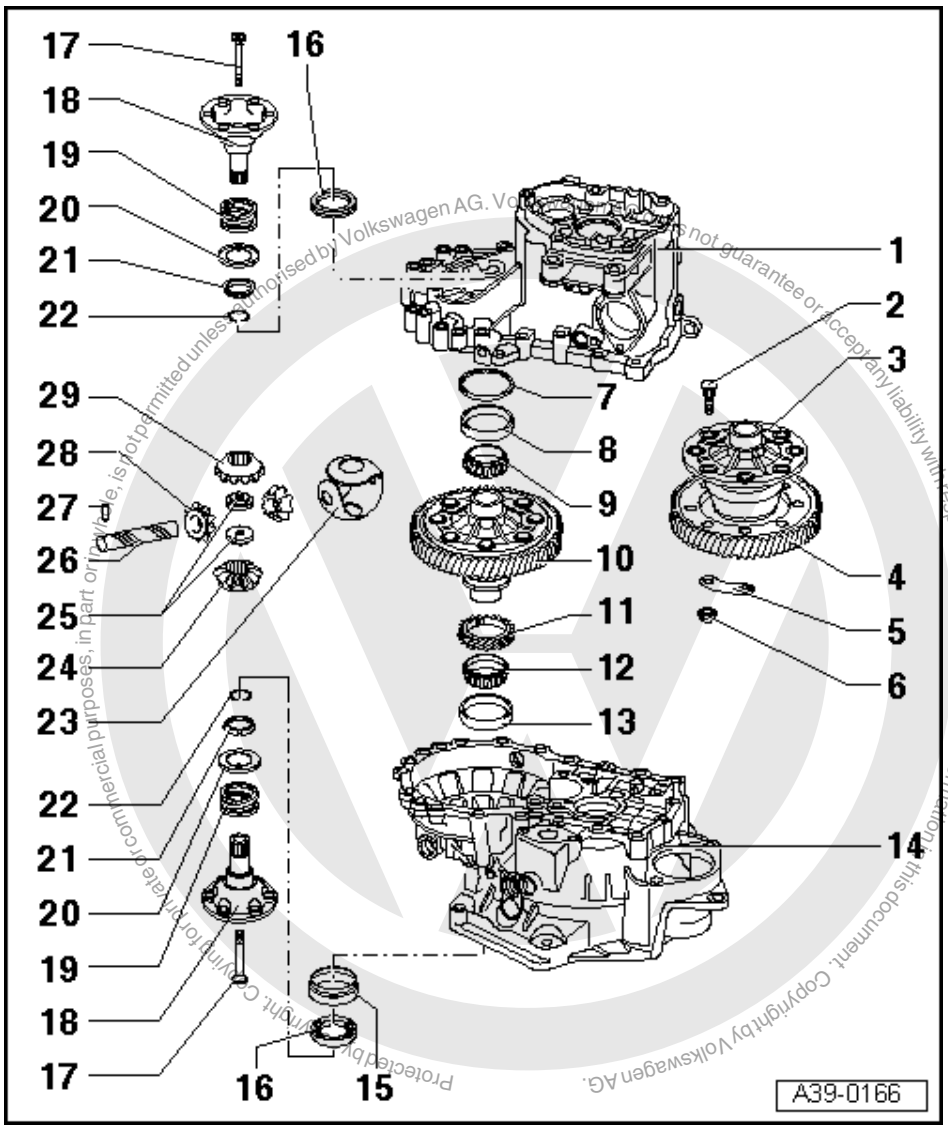

Notes:

- Heat taper roller bearing inner race to 100 °C before installing.
- Always renew both taper roller bearings together as a set.
- If differential housing, gearbox housing or clutch housing taper roller bearings are renewed adjust differential => Page 221 .

1 Gearbox housing
2 Bolt
3 Differential cage
- Bolt to final drive gear

satelettronica

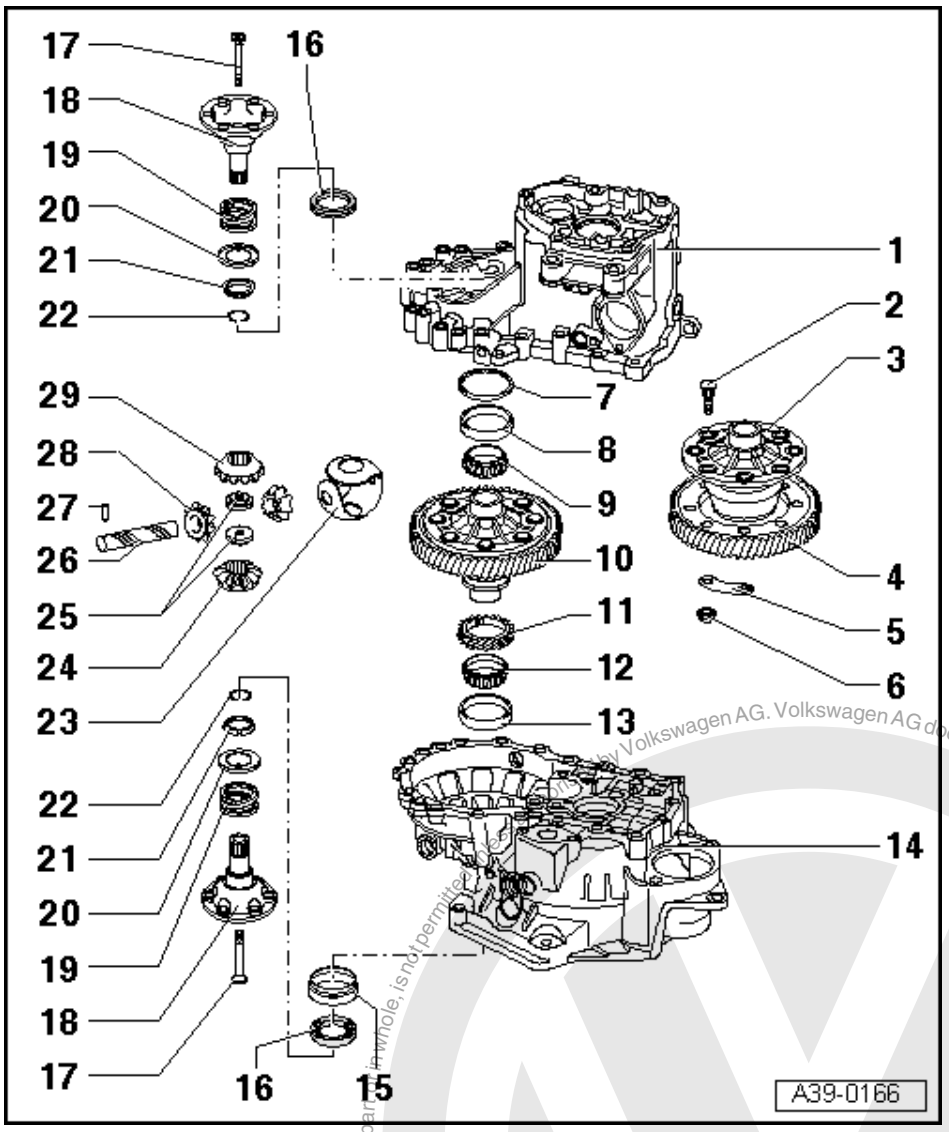

4 Final drive gear wheel
- Rivetted in production
- Is paired with output shaft, only renew as a set
- Pressing off => Fig. 9
- Installation position => Fig. 10
- Heat to 100 °C before installing
- Fit to differential housing => Fig. 11
- Bolted => Fig. 12

5 Backing plate

6 Nut, 70 Nm

7 Shim
- For differential
- Determining thickness => page 221

8 Taper roller bearing outer race
- Driving out => Fig. 5
- Pressing in => Fig. 6

Protected by copyright. Copying for private or commercial purposes, in part or in whole, is not permitted unless authorised by Volkswagen AG. Volkswagen AG does not guarantee or accept any liability with respect to the correctness of information in this document. Copyright by Volkswagen AG.
satelettronica

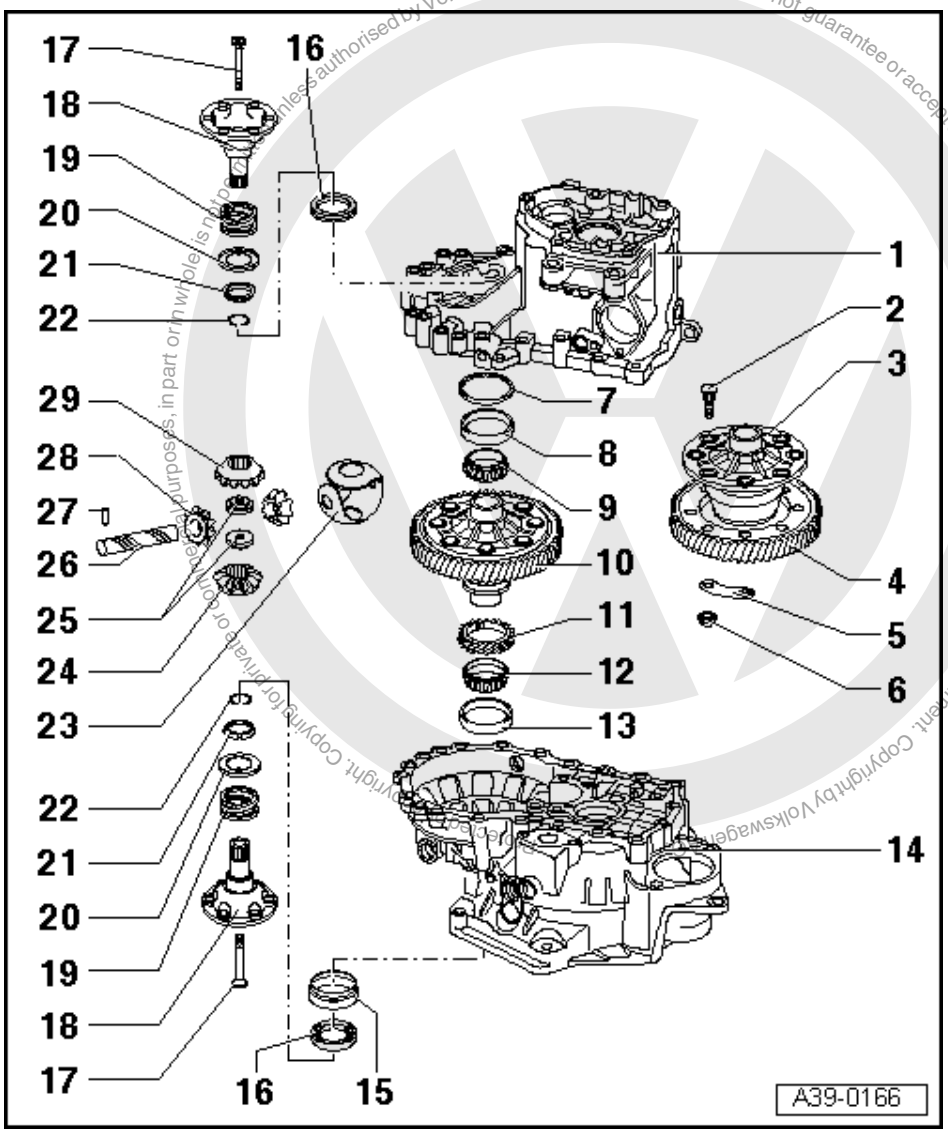

9 Taper roller bearing inner race
- Pulling off => Fig. 3
- Pressing on => Fig. 4

10 Differential housing
- With rivetted final drive gear
- When renewing final drive gear drill out rivet heads => Fig. 8
- Attaching final drive gear with bolts => Fig. 12

11 Speedometer drive wheel
- Fit onto differential housing as far as stop before pressing on inner race

12 Taper roller bearing inner race
- Pulling off => Fig. 3
- Pressing on => Fig. 4

satelettronica

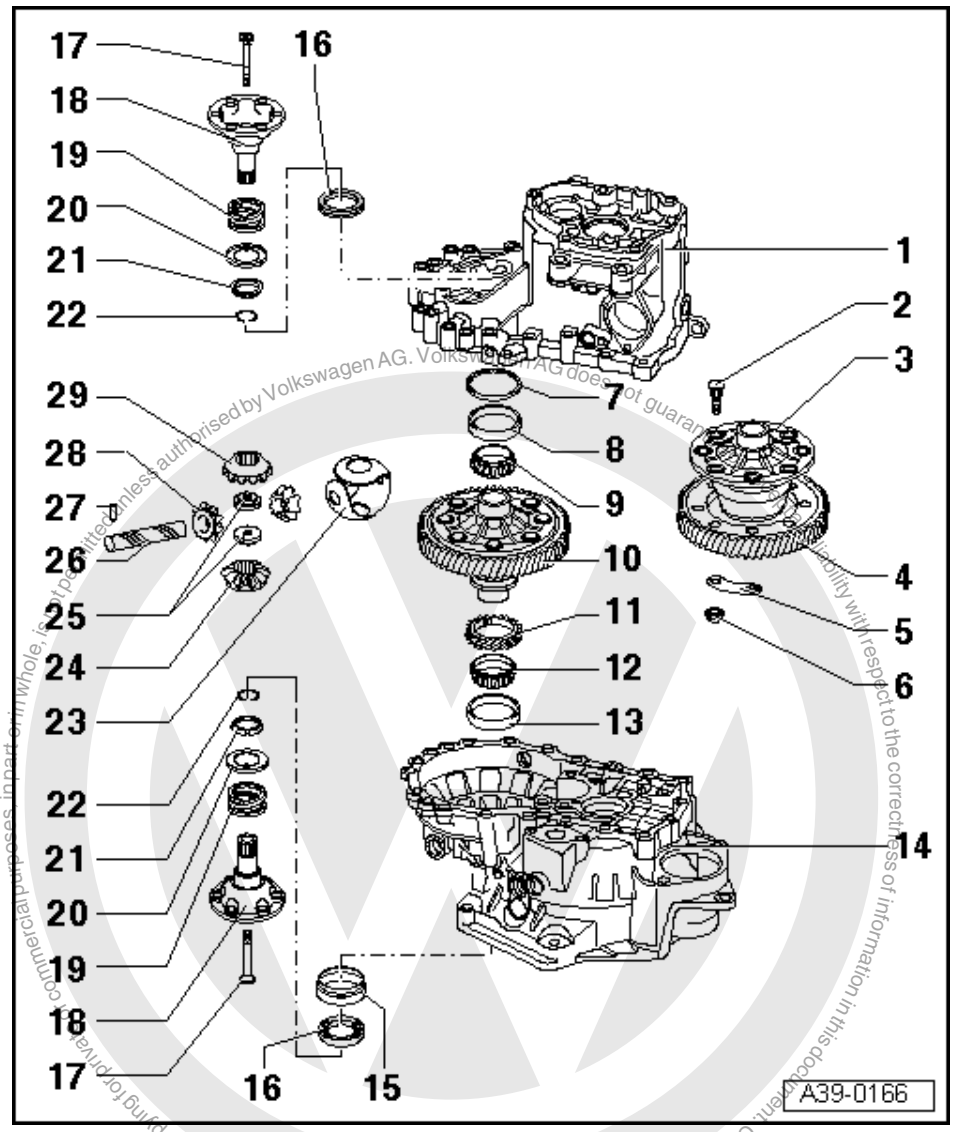

13 Taper roller bearing outer race

- Knocking out => Fig. 1
- Pressing in => Fig. 2

14 Clutch housing

15 Sleeve

- Installed in conjunction with springs behind flange shafts
- To accept oil seal (item 16)
- Removing and installing
  => Page 127

16 Oil seal

- Renewing => Page 203

17 Counter-sunk head bolt, 25 Nm

- Bolt into threaded piece (item 25)

satelettronica

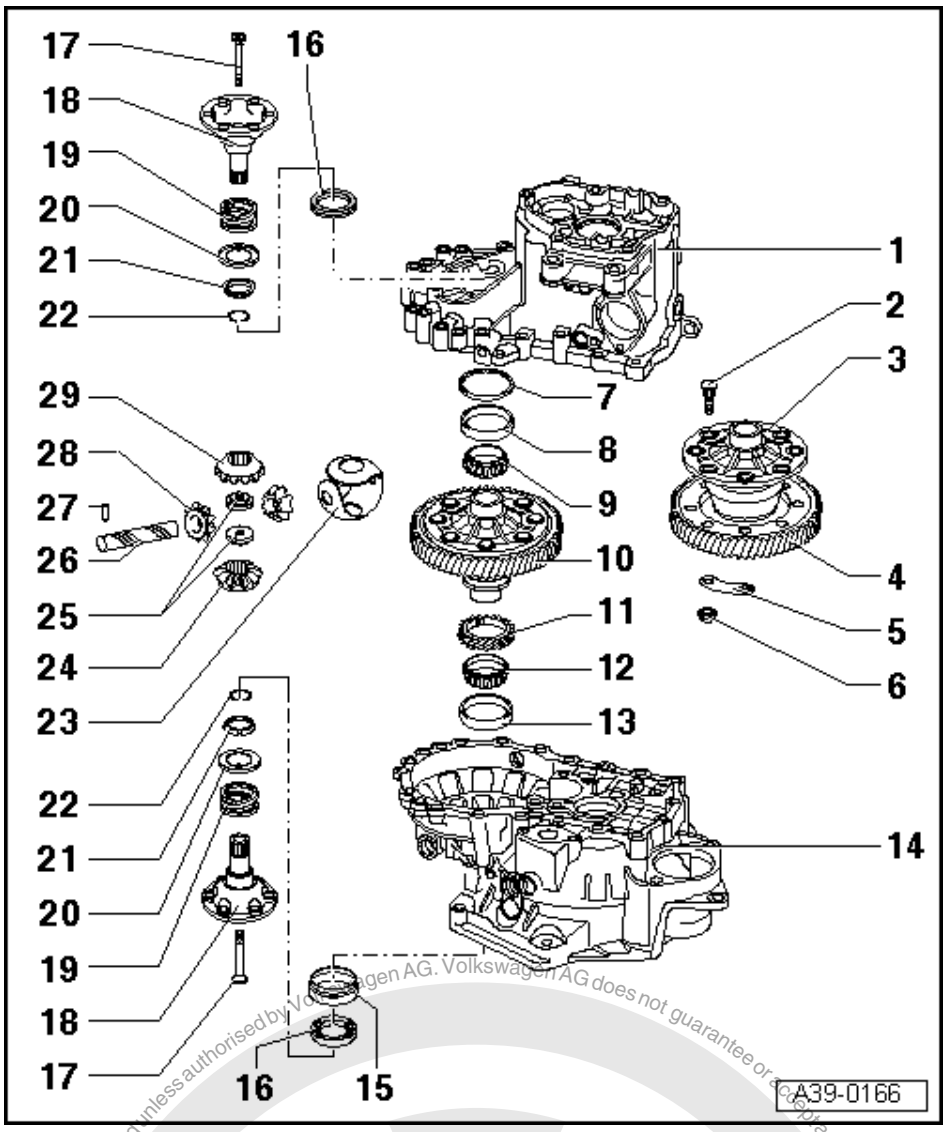

18 Flange shaft

- Removing and installing
  => Page 203

19 Spring for flanged shaft

- Installed behind flanged shafts

20 Thrust washer

- Installation position:
  Shoulder towards spring, tongue to tapered ring

21 Tapered ring

- With grooves to secure thrust washer
- Installation position: Taper towards differential housing

22 Securing clip

- Ensures taper ring, thrust washer and spring are held in position when flange shaft is removed

satelettronica
Protected by copyright. Copying for private or commercial purposes, in part or in whole, is not permitted unless authorised by Volkswagen AG. Volkswagen AG does not guarantee or assume any liability with respect to the correctness of information in this document. Copyright by Volkswagen AG.

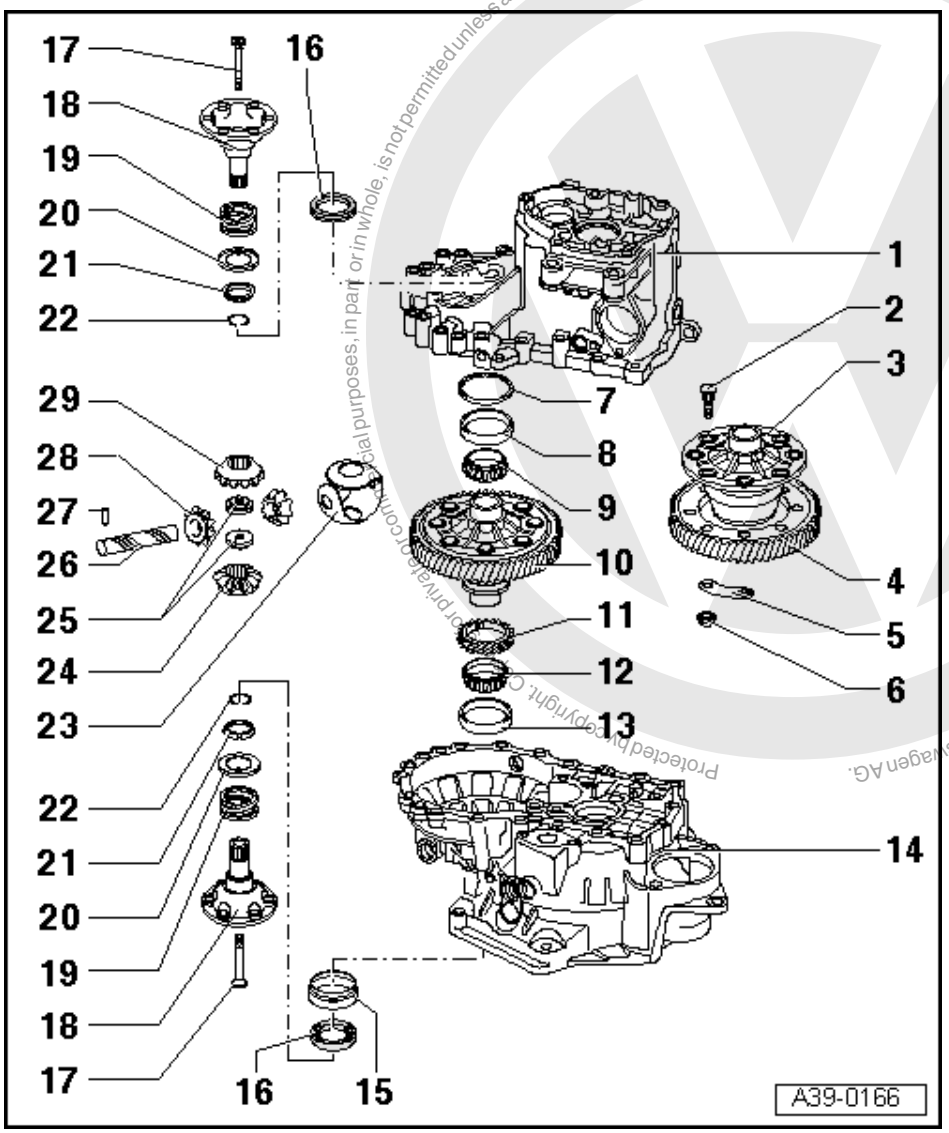

23 One-piece thrust washer
- Coat with gearbox oil when installing

24 Sun wheel
- Installing => Fig. 14

25 Threaded piece
- Installing => Fig. 14

26 Planet pinion axis shaft
- Knock out with drift
- Installing => Fig. 14

27 Spring pin
- For securing planet pinion axis shaft
- Removing and installing => Fig. 13

28 Planet pinion
- Installing => Fig. 14

29 Sun wheel
- Installing => Fig. 14

satelettronica

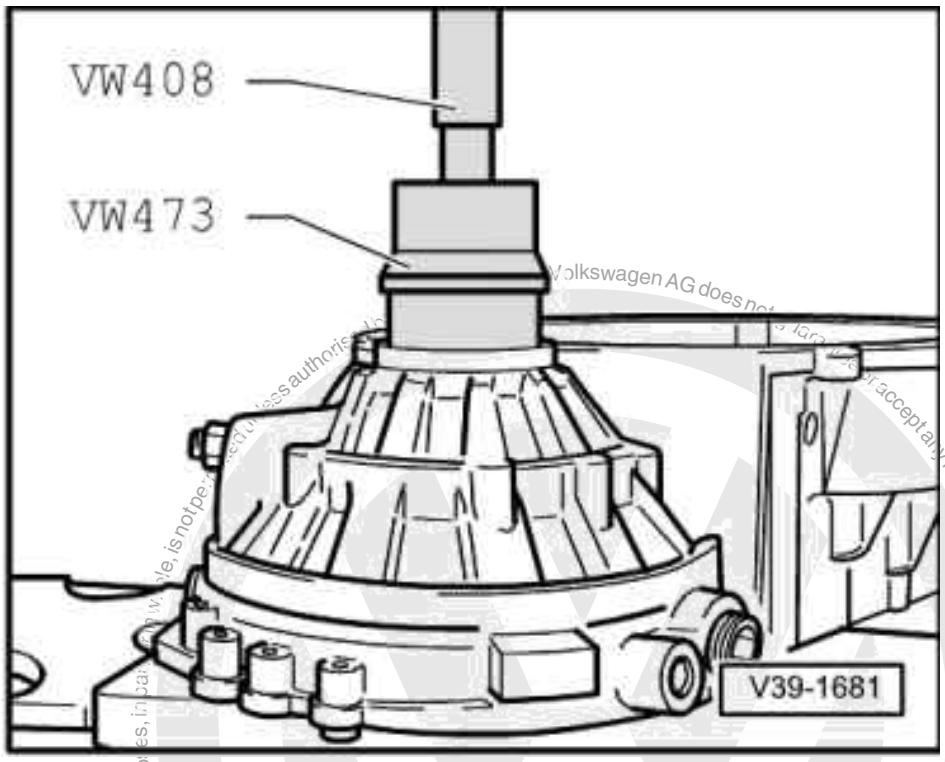

-> Fig.1 Knocking taper roller bearing outer race out of clutch housing

- First remove flange shaft seal mounting sleeve on gearboxes with springs behind flange shaft.

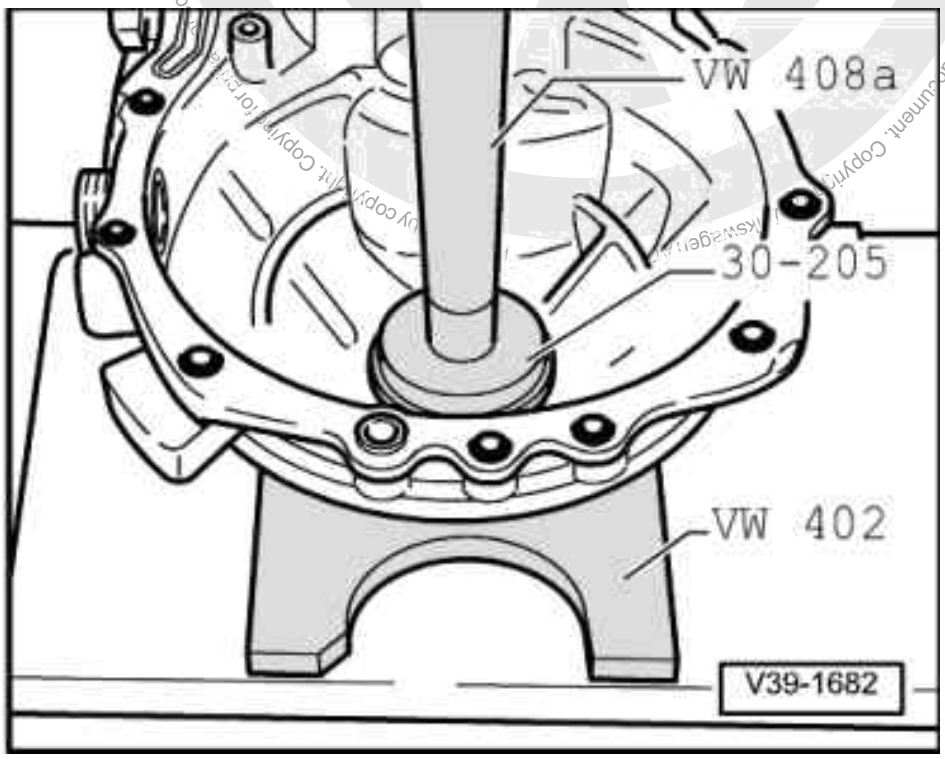

satelettronica

-> Fig.2 Pressing taper roller bearing outer race into clutch housing

No shim is installed in the clutch housing end.

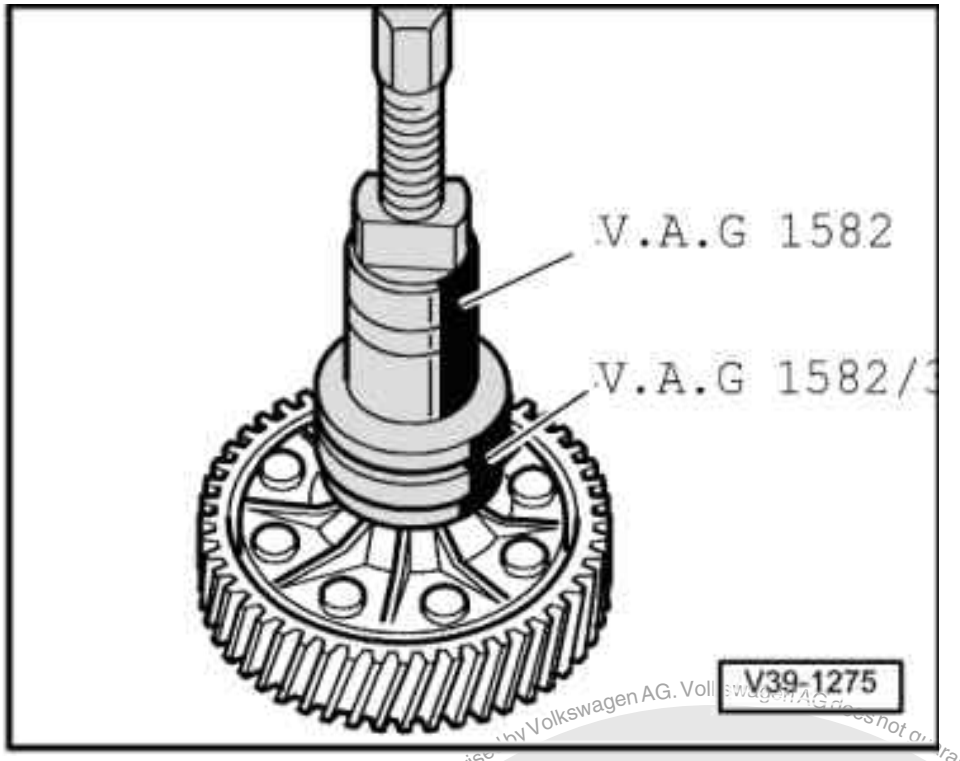

-> Fig.3 Pulling off taper roller bearing inner race

- Before fitting the extractor position press piece 40-105 on differential housing.

Note:

Both both taper roller bearing inner races are pulled off the differential housing in the same way.

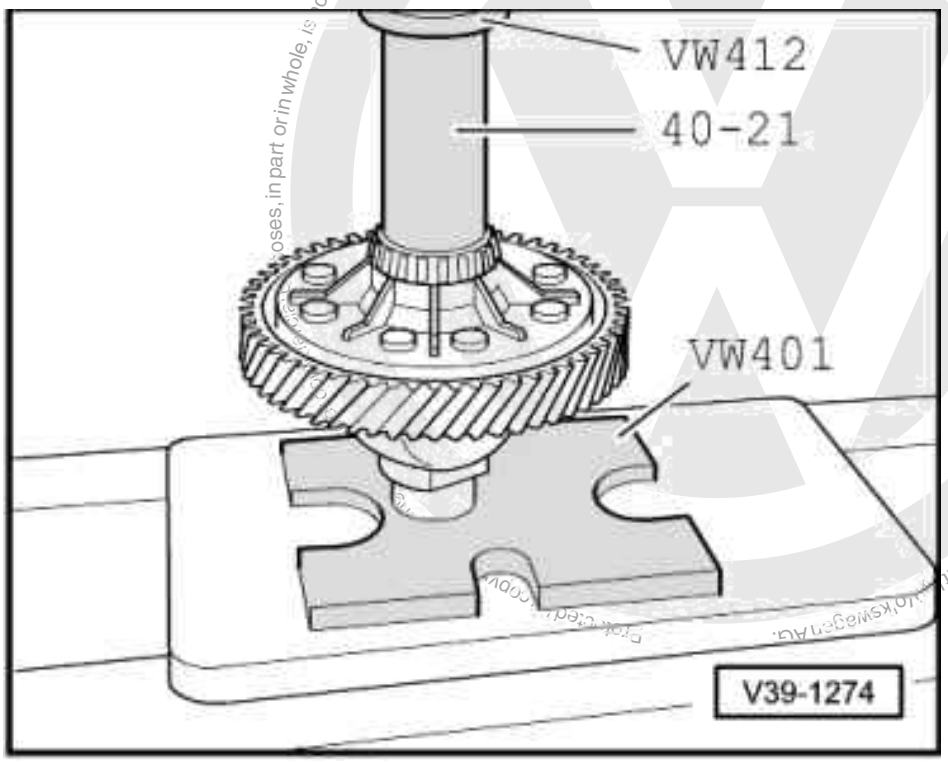

satelettronica

Volkswagen AG. Volkswagen AG does not guarantee or accept any liability with respect to the correctness of information in this document. Copyright by Volkswagen AG.

-> Fig.4 Pressing on taper roller bearing inner race

Note:

The taper roller bearing inner races for gearbox housing and clutch housing are pressed on with the same press tools.

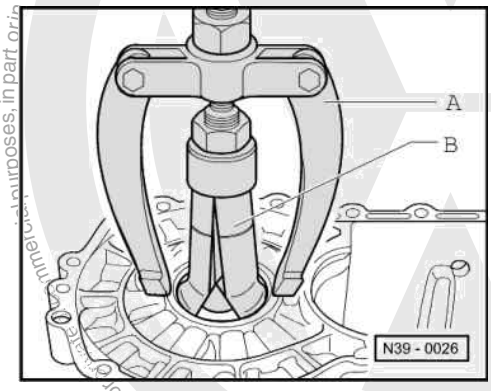

-> Fig.5 Pulling taper roller bearing outer race out of gearbox housing

A - Counter support, e.g. Kukko 22/2

B - Internal puller 46...58 mm, e.g. Kukko 21/7

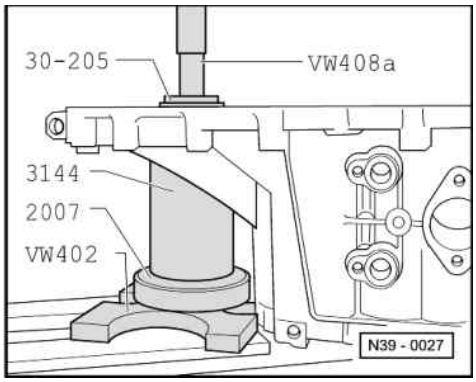

-> Fig.6 Pressing taper roller bearing outer race into gearbox housing

- Fit shim under outer race.
- Support gearbox housing with sleeve 3144 directly below bearing mounting.

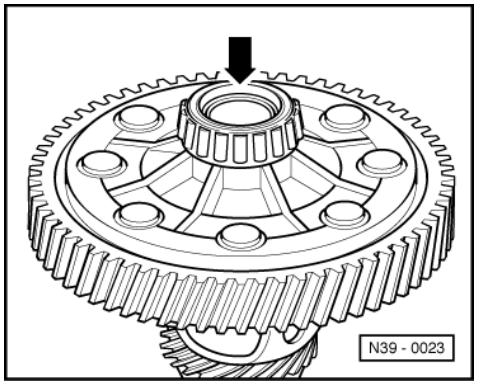

satelettronica

-> Fig.7 Both sides of differential housing are chamfered (arrow) to accept tapered rings/springs

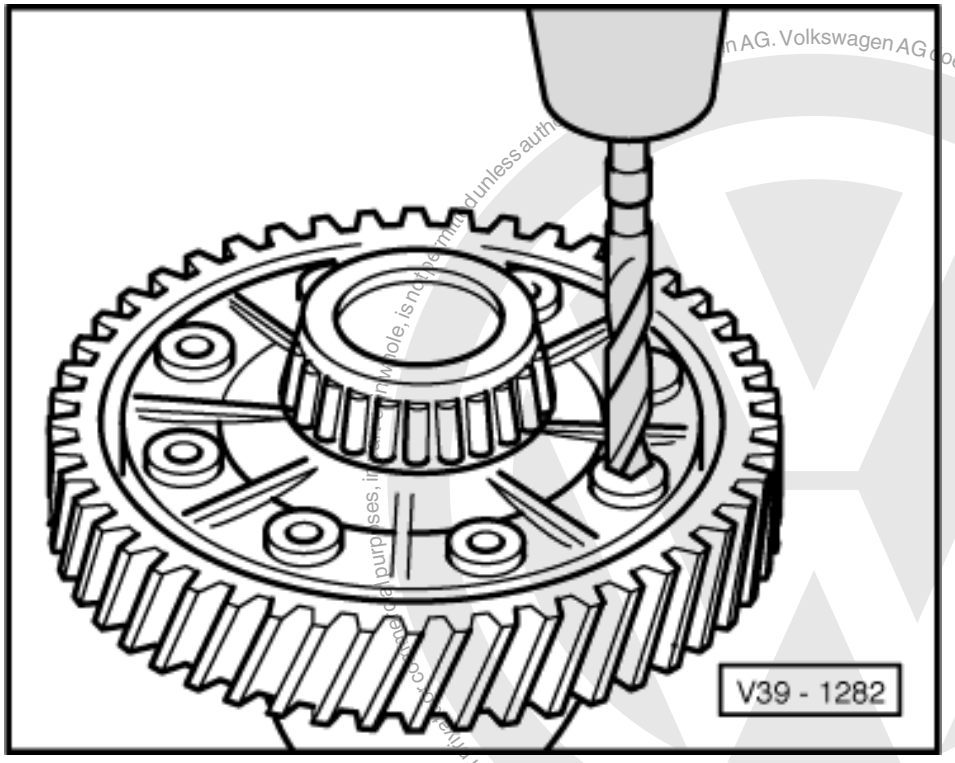

-> Fig.8 Drilling out rivet heads

- Drill out rivet heads with 12 mm drill from countersunk side and knock-out with drift.

Note:

Clean differential before and after drilling, protect taper roller bearing from drillings.

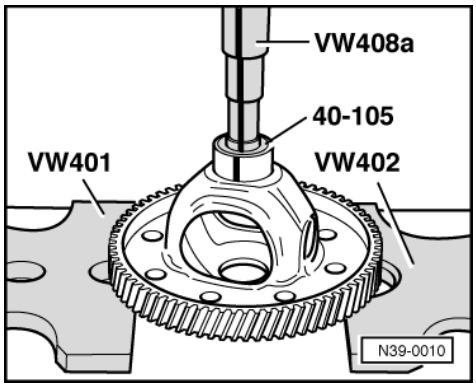

-> Fig.9 Pressing off final drive gear

- Place thrust piece 40-105 on differential housing.

Protected by copyright. Copying for private or commercial purposes, in whole or in part, is not permitted unless authorised by Volkswagen AG. Volkswagen AG does not guarantee or accept any liability with respect to the correctness of information in this document. Copyright by Volkswagen AG.
satelettronica

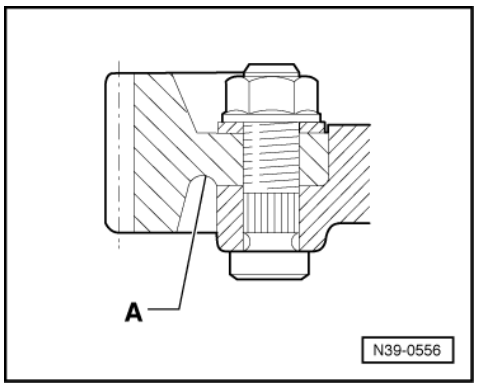

-> Fig.10 Installation position of final drive gear wheel

The circular groove -A- faces towards bolt-on side of differential.

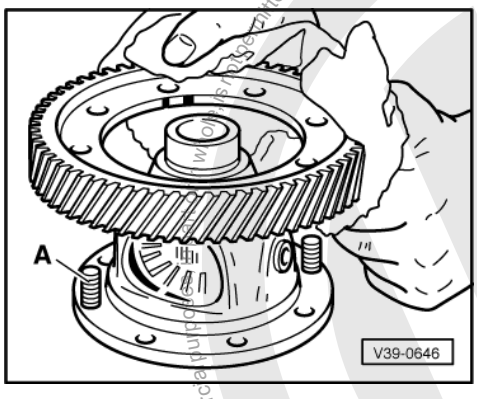

-> Fig.11 Heating final drive gear wheel to approx. 100 °C and installing

- Use bolts -A- from repair kit to guide final drive gear into position during installation.

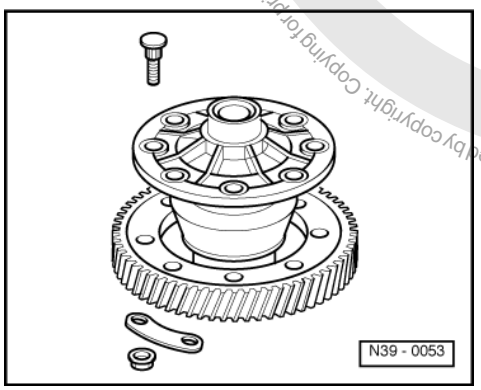

-> Fig.12 Bolting final drive gear and differential housing together

Use special bolts with plates and nuts according to parts catalogue.

Protected by copyright. Copying for private or commercial purposes, in part or in whole, is not permitted unless authorised by Volkswagen AG. Volkswagen AG does not guarantee or accept any liability with respect to the correctness of information in this document. Copyright by Volkswagen AG.
www.vwtaylor.com
satelettronica

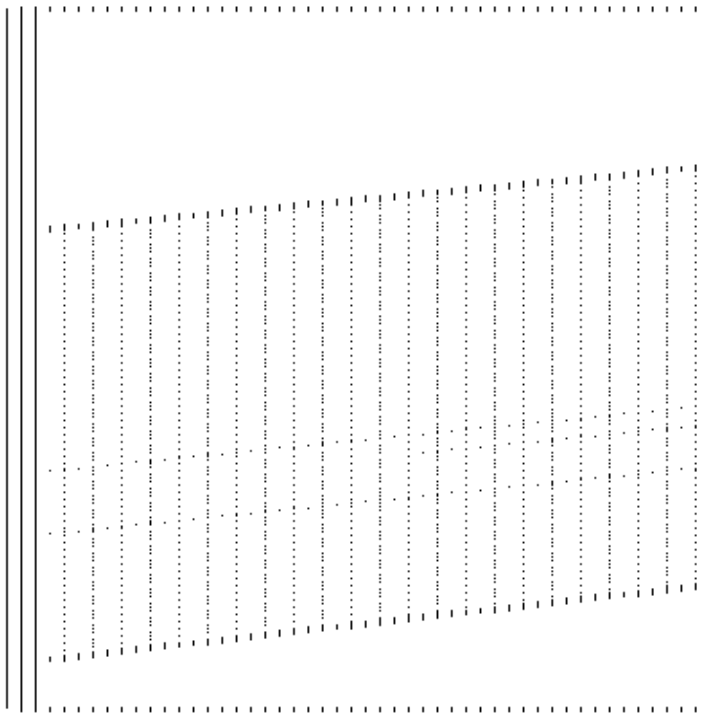

-> Fig.13 Removing and installing planet wheel axis shaft spring pin

Removing

- Cover taper roller bearing inner race and speedometer drive gear to avoid possible damage and ingress of metal particles.
- Knock-out spring pin with chisel, inserting chisel into circumferential groove.

Installing

- Knock fully into the differential cage.

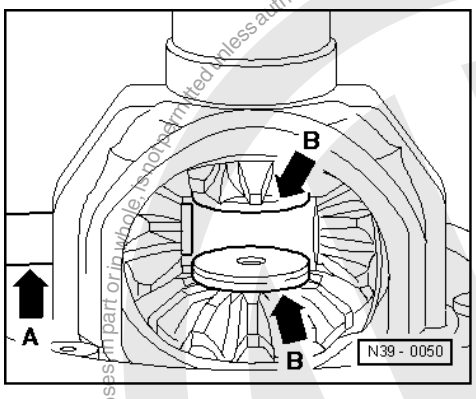

-> Fig.14 Installing sun wheels and planet pinions

- Lubricate one piece thrust washer with gearbox oil and install.
- Install both sun wheels and secure (e.g. with flanged shaft).
- Insert planet wheels (180°apart) and pivot into position.
- Push planet wheel axis shaft (arrow -A-) in until first planet wheel.
- Position threaded pieces (arrow -B-) in sun wheels
  Installation position: step towards sun wheel

Protected by copyright. Copying for private or commercial purposes, in part or in whole, is not permitted unless authorised by Volkswagen AG. Volkswagen AG does not guarantee or accept any liability with respect to the correctness of information in this document. Copyright by Volkswagen AG.
satelettronica

- Drive planet wheel axis shaft into final position and secure with spring pin.

3 - Adjustment overview

3.1 - Adjustment overview

Note:

If repairs have been carried out to the gearbox it is only necessary to adjust the input shaft, output shaft or differential if components have been renewed which have a direct effect on the adjustment of the gearbox. Refer to the following table to avoid unnecessary adjustment:

		to be adjusted:		
		Input shaft => Page 160	Output shaft => Page 195	Differential => Page 221
Parts renewed:	Gearbox housing	x		x
	Clutch housing	x	x	x
	Input shaft	x		
	Output shaft (final drive)		x	
	Differential housing			x
	Input shaft taper roller bearing	x		
	Output shaft taper roller bearing		x	
	Differential taper roller bearing			x
	4th gear wheel	x		

Protected by copyright. Copying for private or commercial purposes, in part or in whole, is not permitted unless authorised by Volkswagen AG. Volkswagen AG does not guarantee or accept any liability with respect to the correctness of information in this document. Copyright by Volkswagen AG.
satelettronica

4 - Adjusting differential

4.1 - Adjusting differential

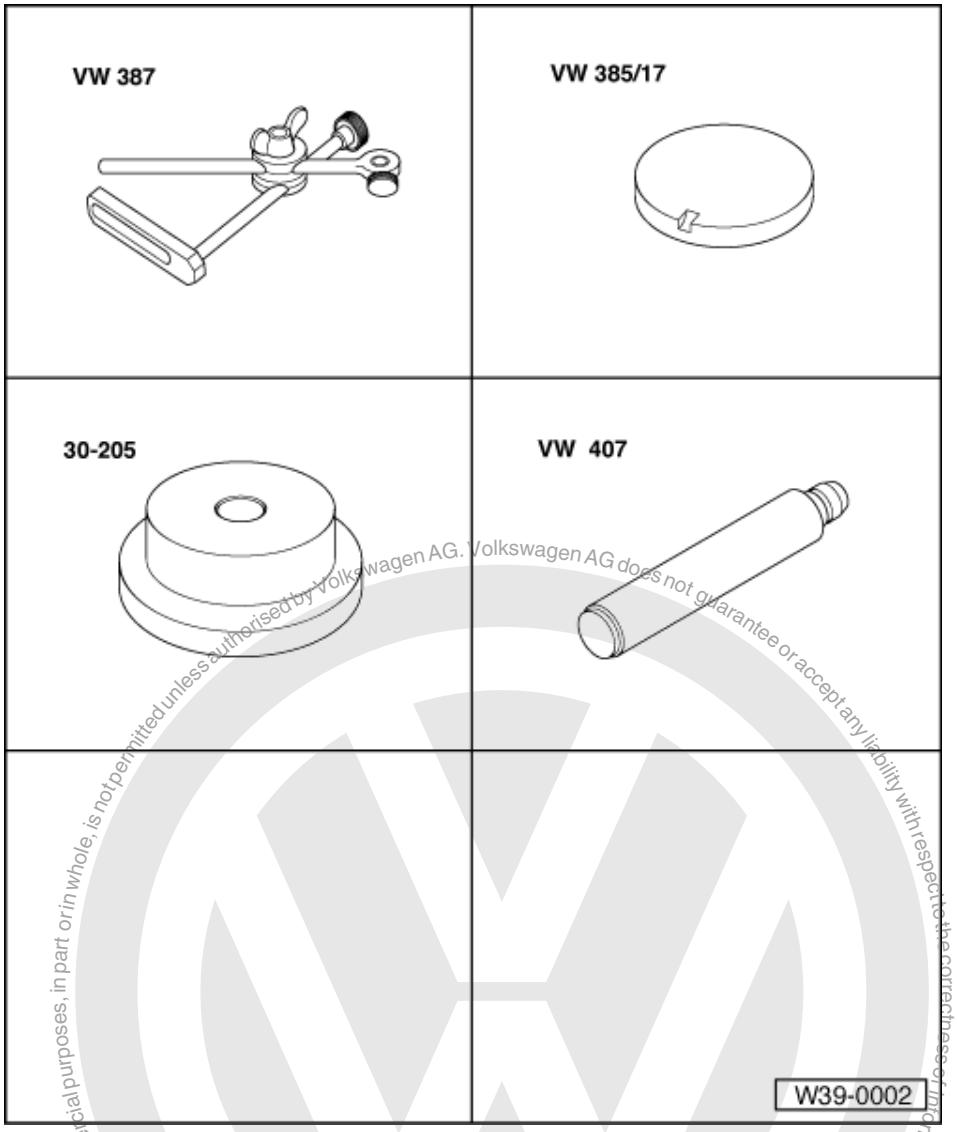

Protected by copyright. Copyright by Volkswagen AG. Volkswagen AG does not guarantee or accept any liability with respect to the correctness of information in this document. Copyright by Volkswagen AG. Commercial purposes, in part or in whole, is not permitted unless authorised by Volkswagen AG.

satelettronica

Special tools, testers and auxiliary items

- VW 387 Universal dial gauge bracket
- VW 385/17 End measuring plate
- 30-205 Thrust plate
- VW 407 Press tool
- Dial gauge

The differential must be adjusted, when

- Gearbox housing
- Clutch housing
- Differential housing

or the

- Differential taper roller bearing

Volkswagen AG. Volkswagen AG does not guarantee or accept any liability with respect to the correctness of information in this document. Copyright by Volkswagen AG.

have been renewed.

Adjustment overview => Page 220 .

- Press taper roller bearing outer race into clutch housing using thrust plate 30-205 => Page 215 .

Note:

Taper roller bearing inner and outer races are paired. Do not interchange!

- Pressing taper roller bearing outer race without shim into the gearbox housing using thrust piece 30-205 => Page 216 .
- Fit differential into clutch housing
- Fit gearbox housing and tighten 5 bolts to 25 Nm.

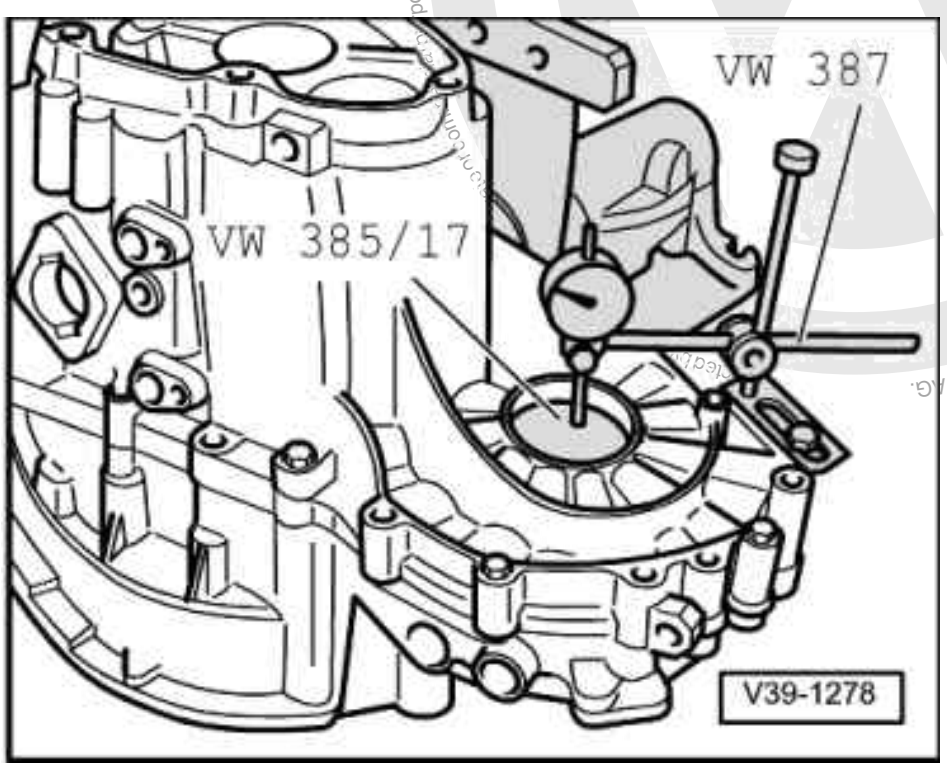

- -> Mount dial gauge and "0" with 1 mm preload.
- Move differential up and down and recall play indicated on dial gauge (Example: 0.70 mm)

Determining shim thickness

The specified bearing preload is obtained by adding a constant figure (0.40 mm) to the reading obtained.

Example:

Reading	0.70 mm
+ Preload (constant figure)	0.40 mm
Thickness of shim =	1.10 mm

- Remove gearbox housing and pull taper roller bearing outer race out from gearbox housing => Page 216 .
- Insert shims of correct thickness, thickest shim first.

The following shims are available:

satelettronica

Size (mm)	Part No.
0.65	02A 409 210
0.70	02A 409 210 A
0.75	02A 409 210 B
0.80	02A 409 210 C
0.85	02A 409 210 D
0.90	02A 409 210 E
0.95	02A 409 210 F
1.05	02A 409 210 G
1.05	02A 409 210 H
1.10	02A 409 210 J
1.15	02A 409 210 K
1.20	02A 409 210 L
1.25	02A 409 210 M

If the size of shim required is larger than that listed in the table, insert two shims totalling the correct figure.

Varying tolerances make it possible by measuring the shims to obtain the exact shim thickness required.

- Knock-in outer race again and tighten gearbox housing.

Protected by copyright. Copying for private or commercial purposes, in any form and by any means, is not permitted unless authorised by Volkswagen AG. Volkswagen AG does not guarantee or accept any liability with respect to the correctness of information in this document. Copyright by Volkswagen AG.
satelettronica